Steam Humidifier
SKE series
BACNET

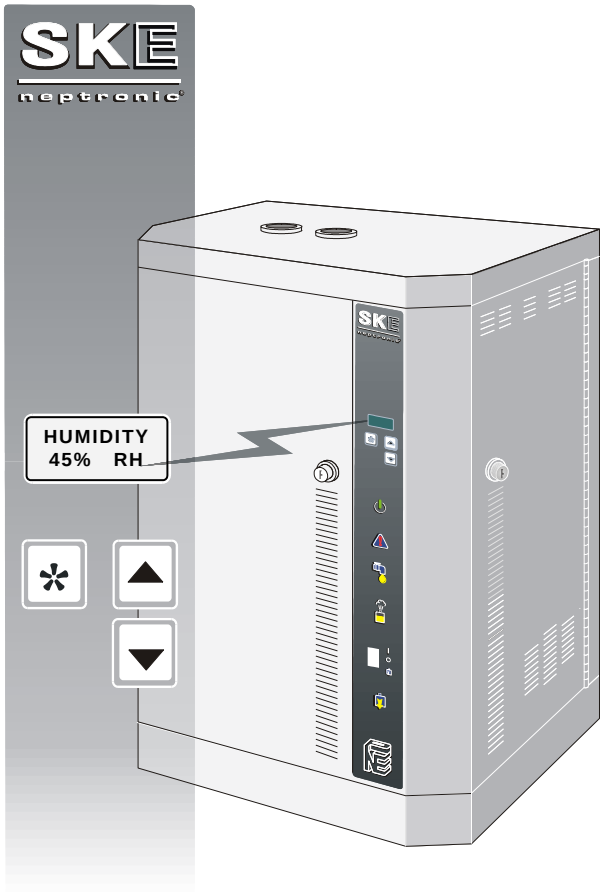

Installation instruction
& user manual

READ AND SAVE THESE INSTRUCTIONS

CE

Foreword

Neptronic Company Overview

Founded in 1976, we're a private corporation that designs, manufactures and distributes products for the HVAC industry. Our product line includes intelligent controllers, electronic actuators, actuated valves, humidifiers and electric heaters.

Our products are designed and manufactured by over 250 dedicated employees in our 7,500 m^2 (80,000 ft^2) state-of-the-art facility located in Montreal, Canada. Using a vertical integration model, our entire manufacturing chain is under one roof from software and hardware development, to SMT circuit board assembly, to sheet metal fabrication, to product testing ensuring that our products are engineered to last.

We currently hold several national and international patents and with our continued commitment to research and development, we provide innovative products and technologies for the ever-evolving challenges of the HVAC industry. Exporting over 70% of our sales, we have an exclusive distribution network around the globe that provides comprehensive solutions to our worldwide customers.

About the Manual

These installation and operation instructions have been developed to facilitate the installation of the Steam Humidifier.

- The strict application of these instructions will ensure the conformity of your installation and operation as per the manufacturer's recommendations.
- The application of these instructions is one of the conditions for the application of the warranty.
- The application of these instructions does not ensure, at any time conformity to procedures, regulation or local codes, regarding electric installation and connection to local water supply.

This product has been declared to conform to applicable European safety and electromagnetic compatibility standards and directives and bear the CE mark. The certificate of conformity CE is available upon request to the manufacturer.

Electricity

All work concerned with electrical installation MUST only be performed by skilled and qualified technical personnel such as an electrician or a technician with appropriate training). The customer is always responsible for ensuring the suitability of the technical personnel. Please observe the local regulations concerning the provision of electrical installations.

Correct Use

Neptronic systems and its products are designed only for humidification use. Any other application is not considered appropriate for the intended purpose. The manufacturer cannot be made liable for any damage resulting from incorrect use.

General Warranty

This product is subject to the terms and conditions described at http://www.neptronic.com/Sales-Conditions.aspx.

Table of contents

1. Presentation

Thank you for your confidence in our Neptronic® product. You have purchased the best and the most robust humidifier for its category.

1.1. Overview

1.1.1. List of accessories supplied

- 2 sets of keys.
- 2 adjustable collars for the connection of the steam hose for each steam output.
- 1 female compression fitting ¾" (DN20) hydraulic for the drain output of the evaporation chamber.
- 1 female compression fitting ½" (DN15) hydraulic for the drain output of the drip pan.
- 1 flexible hose for the water supply connection.
- 1 Installation Instructions and User Manual.

1.1.2. Overview of the Humidifier

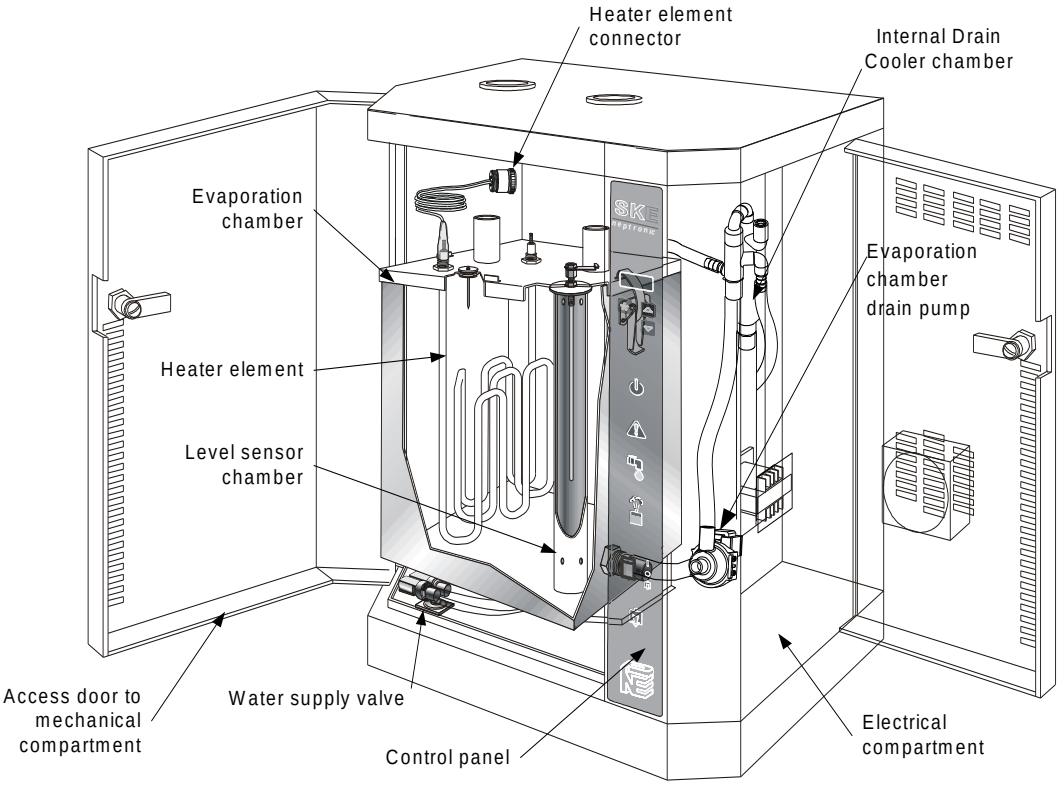

(Illus. 1)

Options avalaible

The following options are available when purchasing a SKE humidifier:

- Modulating control humidifier – suffix M (i.e. SKE20**M**)
- Humidifier for system supplied with Deionised water or Reverse Osmosis water, dissolved solids more than 1 ppm (SF DI-APPLICATION)
- Humidifier for system supplied with Deionised water or Reverse Osmosis water, dissolved solids more than 0.028 ppm (SF ULTRAPURE-DI)
- Space Distribution Unit mounted on humidifier (SDU) or remote installation (SDU-REM)
- Network communication system, BACnet – suffix B (i.e. SKE20M-400-3**B**)
- Stainless steel humidifier cabinet – suffix P (i.e. SKE20M-400-3**P**)
- Dry contact to activate an external fan relay on a call for humidity (SF SK300FANRELAY)

1.2. Definition

1.2.1. Evaporation chamber

Assembly including the metal cylinder and a cover equipped with one or several heater elements. It is the heart of the humidifier, which produce steam.

1.2.2. SDU (Space Distribution Unit)

Integrated steam distribution unit, optional on certain humidifiers.

1.2.3. Multi-Steam system

Custom made system of steam distribution. This system is designed to allow very short absorption distances (less than 900mm).

1.2.4. S.A.M. (Steam Absorption Manifold)

Steam manifold adapted to air duct size to allow steam absorption in relatively short distance (less than 1500mm).

1.2.5. S.A.M.E2 (Steam Absorption Manifold with 2 Eyelets)

Steam manifold with two eyelets adapted to application with restricted air duct dimensions to allow steam absorption in relatively short distance (less than 1500mm).

1.3. Output and Power Consumption

Model	Steam	Consumption			Output	
	Capacity (Kg/Hr)	Power (KW)	Current (A)		Qty	Diam (mm)
			230V 1 phase	400 V 3 Phases		
SKE05	5	3,7	16	5,5	1	35
SKE10	10	7,5	33	11	1	35
SKE20	20	15	-	22	1	35
SKE30	30	22	-	33	2	35
SKE40	40	30	-	44	2	35
SKE50	50	36	-	53	2	51
SKE60	60	44	-	64	2	51
SKE80	80	60	-	87	3	51

2. Characteristics

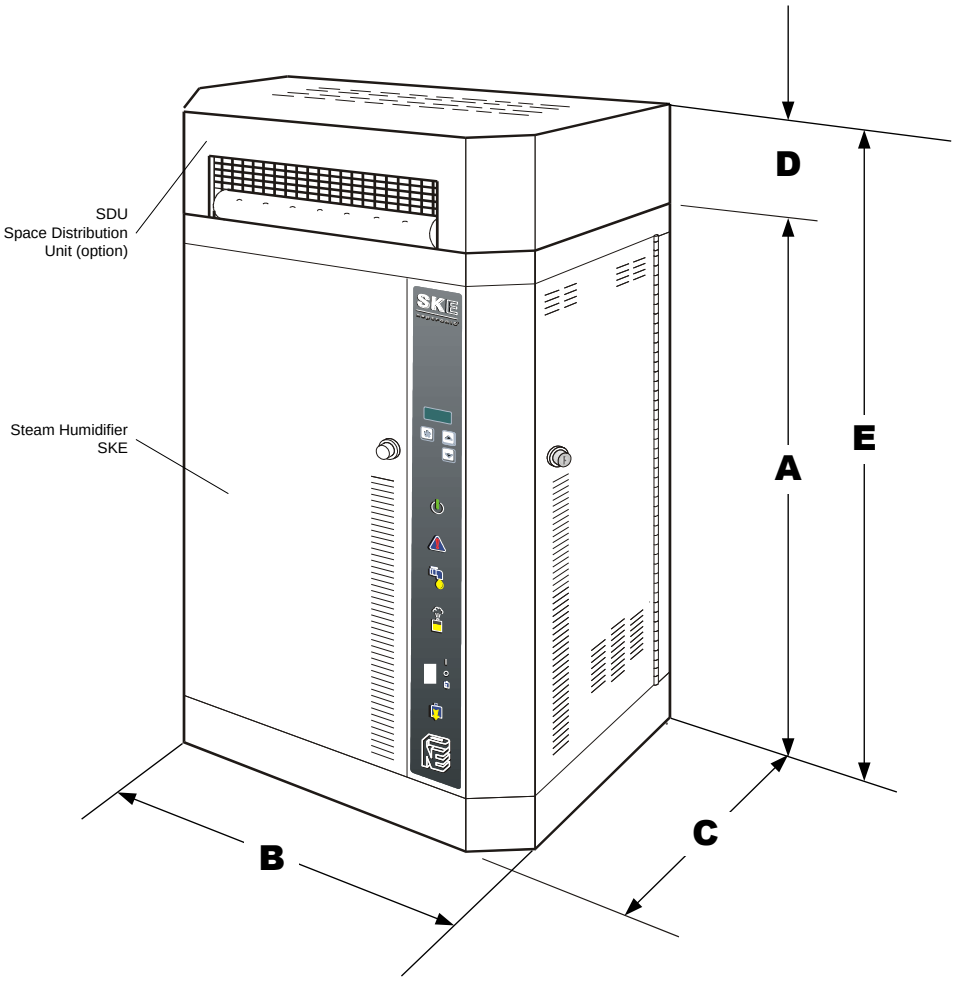

(Illus. 2)

2.1. Dimensions & weight

Model	Dimension of the cabinet (mm)						Weight		Option SDU
	Size	A	B	C	D	E	Empty lb (kg)	Full lb (kg)	
SKE05	Small	597	470	292	140	737	44 (20)	57 (26)	**SDU-1**
SKE10	Medium	724	533	318	165	890	66 (30)	115 (52)	**SDU-2**
SKE20	Medium	724	533	318	165	890			**SDU-2**
SKE30	Medium	724	533	318	324	1048			**SDU-3**
SKE40	Medium	724	533	318	324	1048			**SDU-3**
SKE50	Large	794	813	318	-	-	110 (50)	205 (93)	-
SKE60	Large	794	813	318	-	-			-
SKE80	Large	794	813	318	-	-			-

Options:

- On modulating humidifier, the maximum steam output can be programmed with the function "LOCK ON" in Program mode.
- **WARNING (MODULATING HUMIDIFIER)**: THE MAXIMUM POWER OF THE ELECTRICAL INSTALLATION SHOULD BE IN ACCORDANCE WITH THE ABOVE TABLE, DO NOT TAKE ACCOUNT A POSSIBLE REDUCTION OF STEAM OUTPUT, DUE TO MODULATION.

2.2. Option – Weather proof enclosure general dimension and weight

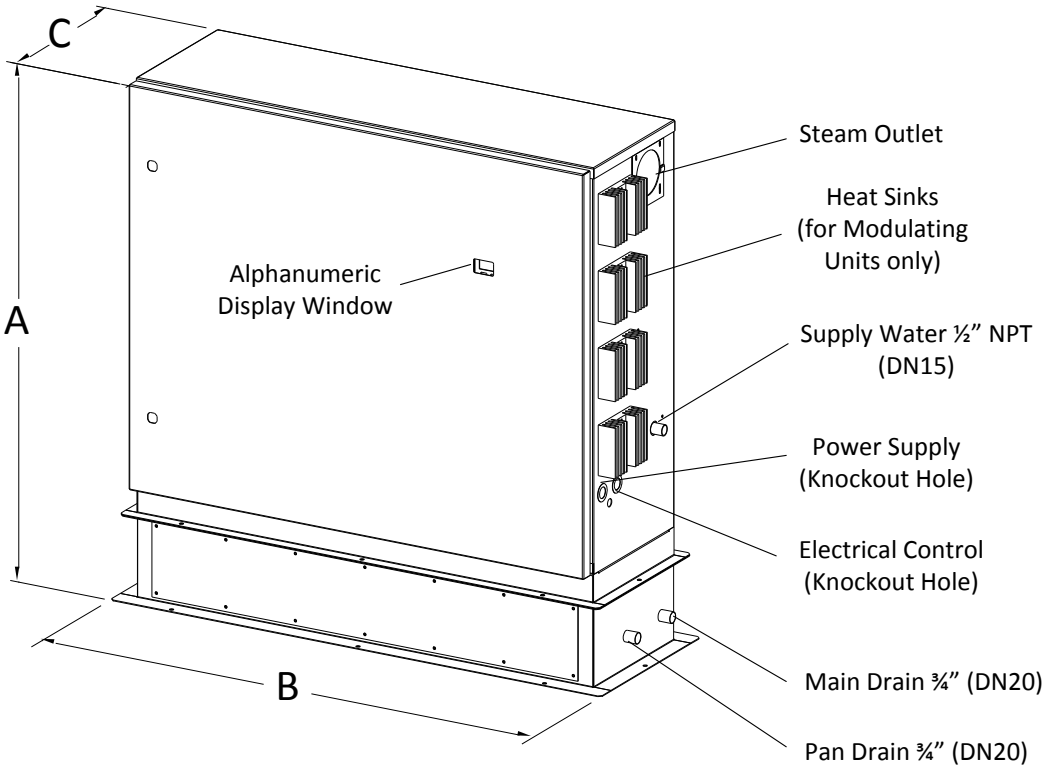

(Illus. 2a)

Model	Dimensions of the cabinet (mm)				
	A	B	C	Weight (kg)	
				Empty	Full of water
SKE05	892	682	287	30	36
SKE10	1034	784	338	43	65
SKE20					
SKE30					
SKE40					
SKE50	1034	1063	338	75	118
SKE60					
SKE80					

3. Mechanical installation

3.1. General recommendations

- **CAUTION**: RISK OF ELECTRIC SHOCK. DISCONNECT THE APPLIANCE FROM THE ELECTRIC SUPPLY BEFORE TO PROCEED TO INSTALLATION.
- **IMPORTANT**: Mechanical installation should conform to local codes and regulations.
- Location: Plan a location easy to access in order to permit an easy inspection and servicing of the humidifier.
  Do not install humidifier where failure of the appliance could cause damage to the building structure or to costly equipment.
  This location should be well ventilated; the ambient temperature should not exceed 30°C.
- Typically, the total steam line length between the humidifier and the steam distributor depends on the steam line material type:
  - For flexible steam hose: the total steam line length should not exceed 5 meters. For longer distances use insulated hard piping.
  - For insulated hard piping: the total steam line length should be determined by the humidifier capacity: 0,67m for each kg/h capacity of the humidifier, with a maximum of 15m. For longer steam line runs, consult factory.

3.2. Positioning

- The front panel and the right side (electrical compartment) should be accessible in order to permit the servicing.
  Leave a clearance of at least 1,25m to the front panel and 0,6m to the right side.
- The humidifier should be mounted at a minimum of 1m to 1,2m above floor level.
  Leave a clearance of at least 0,25m under the humidifier for installation of water supply, drain piping and electrical connections.

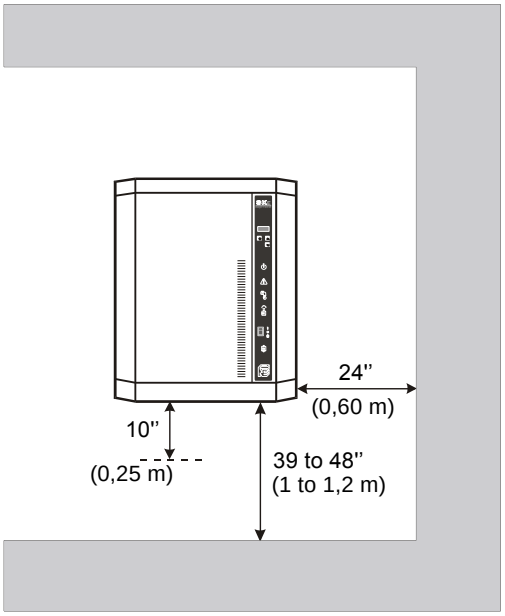

Positioning *(Illus. 3)*

3.3. Wall mounting

- Use the keyholes located on the back panel of the humidifier.
- Before to proceed to the wall mounting, take off the Evaporation chamber sub assembly (see section 12, Servicing).
- Check the solidity of the chosen support or wall (bricks, concrete, stud partition wall, etc) on which the humidifier will be mounted.
- Drill holes for the upper anchors (holes with eyelet) into the support or wall as per dimensions specified in the table (illus.4).
  The holes dimensions (diameter and depth) should by in accordance with the recommendations of the chosen anchors.
- Install then bolt anchors, if required.
- Screw-on the 2 or 3 upper screws (holes with eyelet) of a minimum diameter of #10 (6mm) (screws are not supplied).
  Leave a clearance between head screws and wall in order to permit the mounting of the humidifier.
- Use the keyholes located on the back panel of the humidifier.
- Hang on the humidifier to the 2 or 3 screws; it is preferable let the front door open during this operation.
  According to the size and weight of the humidifier, you may need the help of a second person to assist you.
- When the humidifier is positioned on the upper screws, tighten the screws to secure the humidifier.
- If applicable, install and secure lower screws.

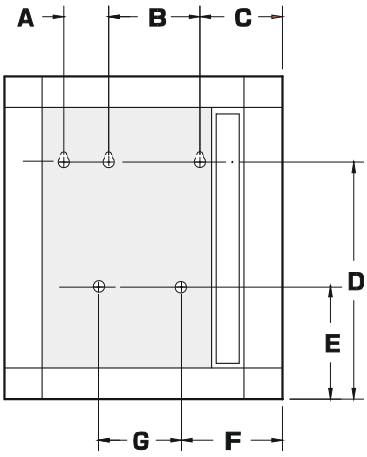

Front view *(Illus. 4)*

Model	Dimensions mm						
	A	B	C	D	E	F	G
SKE05	-	202	165	516	-	-	-
SKE10, SKE20, SKE30, SKE40	-	254	203	625	276	203	254
SKE50, SKE60, SKE80	102	305	265	698	276	576	-

3.4. Weather proof enclosure unit positioning and mounting

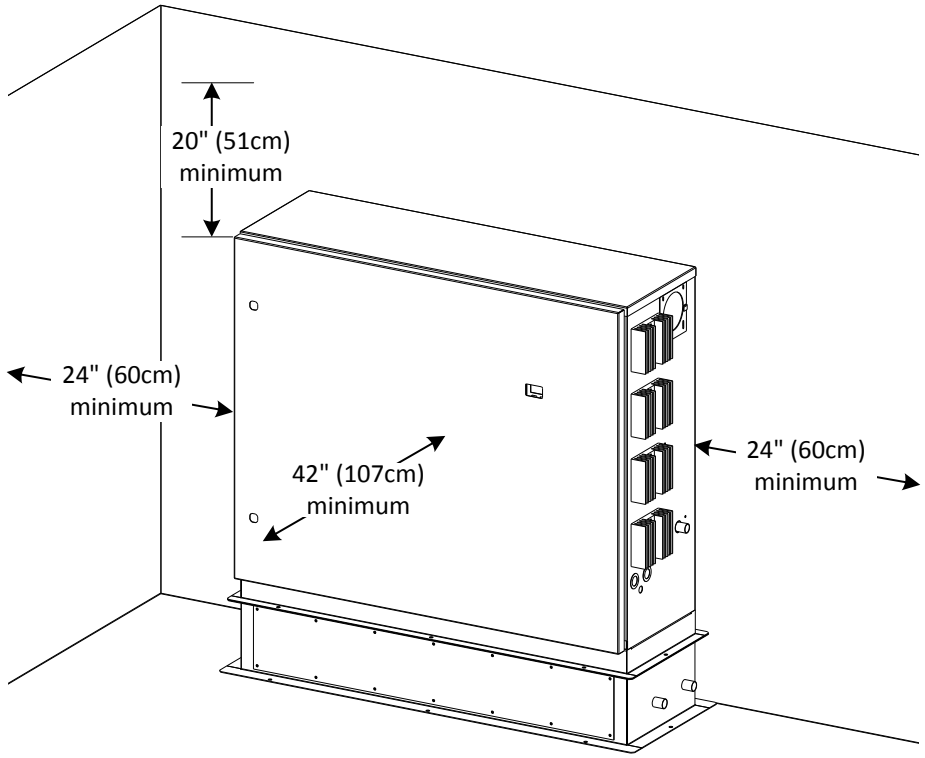

(Illus. 4a)
dimensions in bracket are in cm

General Recommendations

The humidifier should be installed in an easily accessible location to allow proper access for inspection and servicing of the humidifier. The unit should never be installed in a location where unusual malfunction of the unit can cause damage to the building structure or to costly equipment.

Minimum Clearances

Minimum clearances are :

- Top, 51 cm minimum
- Both sides, 60 cm minimum
- Front, 107 cm minimum

Note: Above minimum clearances are indicated for inspection and servicing access.

The humidifier is designed to be installed directly on the floor/roof or a curb.
Provide a level, solid foundation for the humidifier.
Ensure that the floor/roof beneath the humidifier is water proof to withstand any water spillage during servicing or if a problem occurs.

Attach securely and safely the SK enclosure.

4. Steam dispersion system selection and positioning

4.1. Steam dispersion system selection

In order to prevent the accumulation of condensation in air ducts, NEP has designed 4 basic configurations of steam distribution to provide the client with the most economical solution for any particular application.

4.1.1. S.A.M. (steam absorption manifold) Horizontal duct

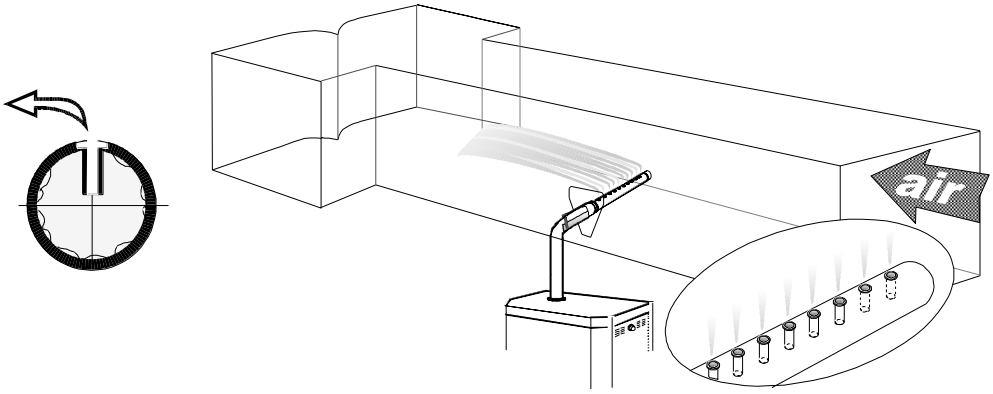

The SAM is to be installed where absorption distances are short, less than 1500mm, and/or low duct temperatures are in effect.

(Illus. 5)

4.1.2. S.A.M.E2 (steam absorption manifold) Horizontal duct

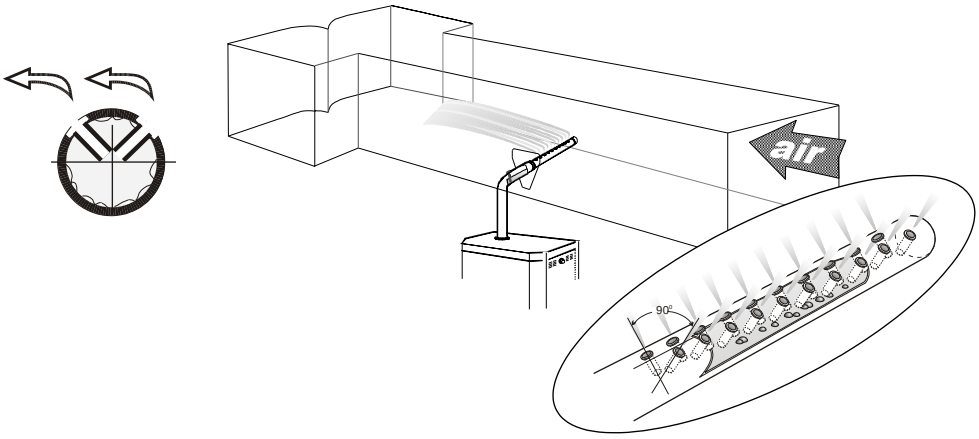

The SAME2 is to be installed where absorption distances are short, less than 1500mm and/or low duct temperatures are in effect. SAME2 are used in applications with restricted duct dimensions.

(Illus. 6)

4.1.3. S.A.M. or S.A.M.E2 (steam absorption manifold) Vertical duct

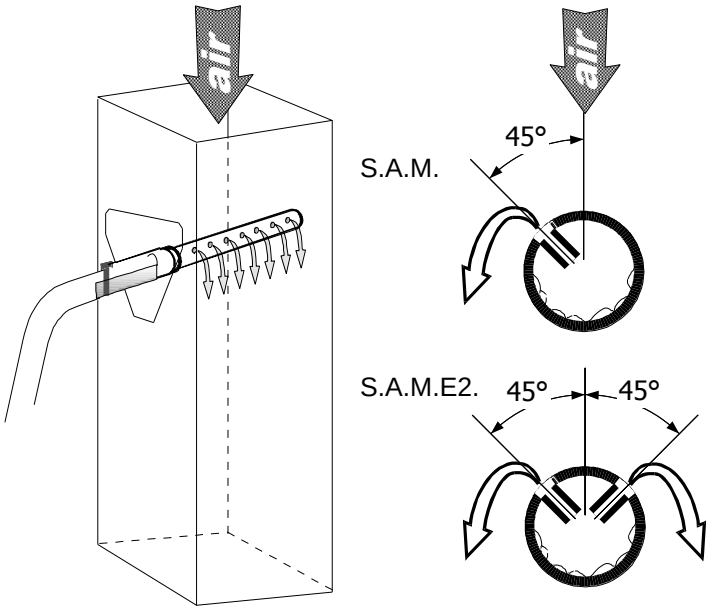

(Illus. 7)

SAM or SAME2 for vertical ducts are used where the absorption distances are normal and the client requires an economical as well as an efficient solution.

4.1.4. Multi-Steam system

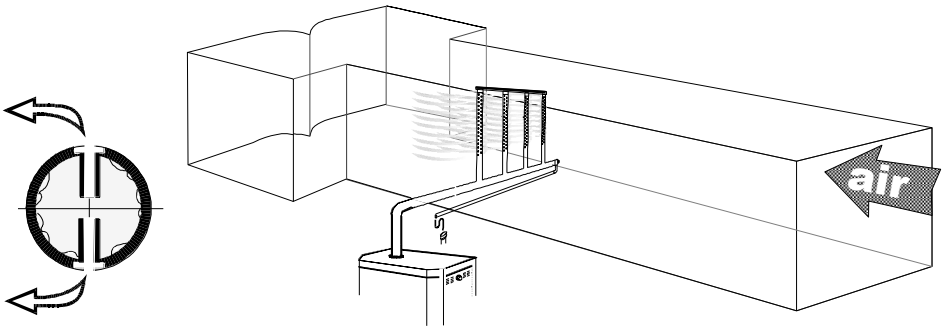

(Illus.8)

The Multi-Steam system is to be installed in critical locations in air handling systems, particularly where absorption distances are very short, less than 900mm, or low air duct temperatures are in effect.

The Multi-Steam is custom made to the dimensions of duct or AHU.

Instructions to install Multi-Steam system are described in a specific installation instructions manual enclosed with the Multi-Steam system.

4.2. Positionning of S.A.M or S.A.M.E2

4.2.1. Duct mounting

Steam manifold should be mounted and secured through the side of the air handling unit or duct. Provision should be made for safe accessibility, ideally with an observation light and window.
Check that the construction of the duct wall is suitable enough to support the steam pipe for the duration of the installation life.
Dimension of hole size in the duct must be as per table below:

Steam manifold Ø	***Hole size ØA***
35mm	51mm
51mm	78mm

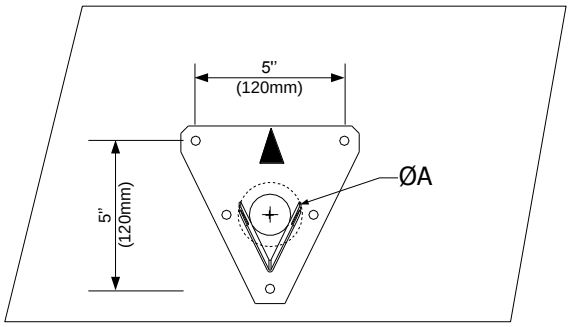

(Illus. 9)

WARNING: Risk of condensing. Ensure that the minimum distance of the end of the manifold is at least 102mm from the top of the duct.

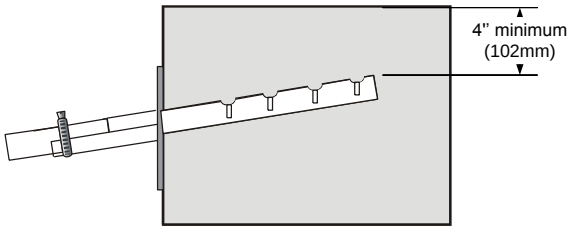

Minimum distance *(Illus. 10)*

4.2.2. Recommendations for SAM distribution pipes

Model	**Maximum Capacity**	**Outlet**		**Distribution pipes**		**Maximum static pressure**
	kg/hr	**Qty**	**Diameter**	**Minimum length**	**Maximum length**	
			mm	**mm**	**mm**	**(Pa)**
SKE05	5	1	35	300	600	1245
SKE10	10			600	1200	
SKE20	20					
SKE30	30	2				
SKE40	40					
SKE50	50		51	800	1600	
SKE60	60					
SKE80	80	3				

Note: For higher static pressure, please contact the manufacturer.

4.2.3. Placement of steam pipe in horizontal duct

35mm diameter pipe

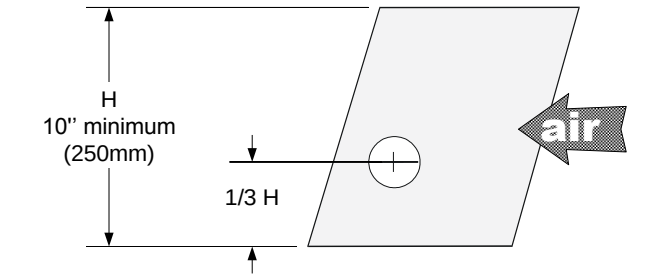

1 pipe *(Illus. 11)*

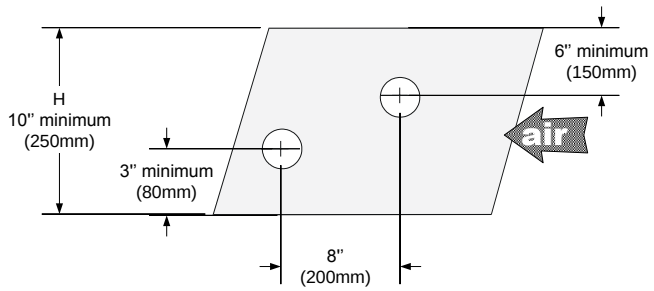

2 pipes *(Illus. 12)*

51mm diameter pipe

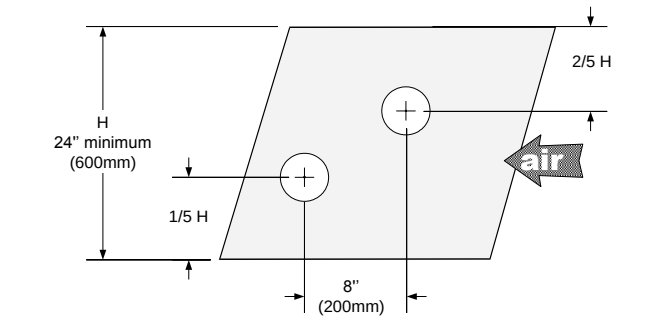

2 pipes *(Illus. 13)*

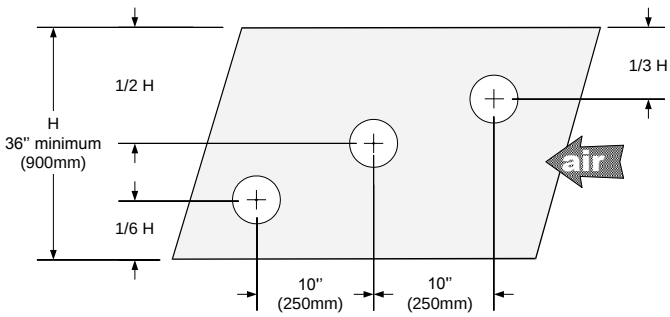

3 pipes *(Illus. 14)*

Note: 51mm steam pipe must be supported on the end by appropriate duct hanger or strap (supplied by others).

4.2.4. Placement of steam pipe in vertical duct

Eyelet orientation

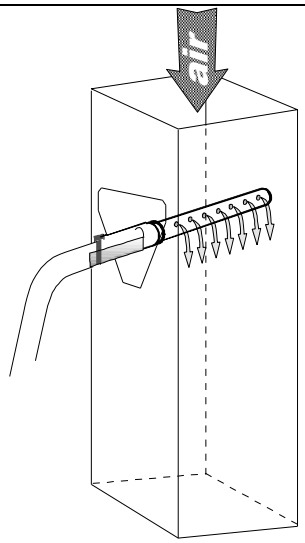

3D view *(Illus. 15)*

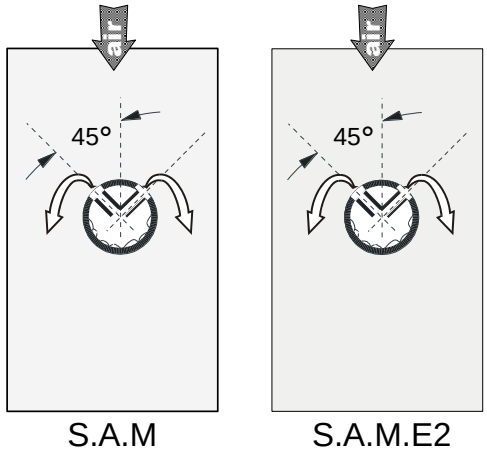

(Illus. 16)

35mm diameter pipe

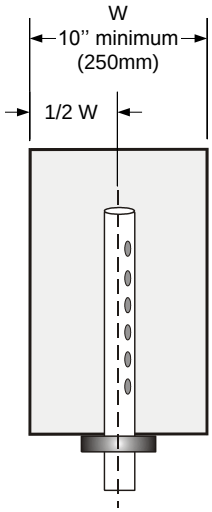

1 pipe *(Illus. 17)*

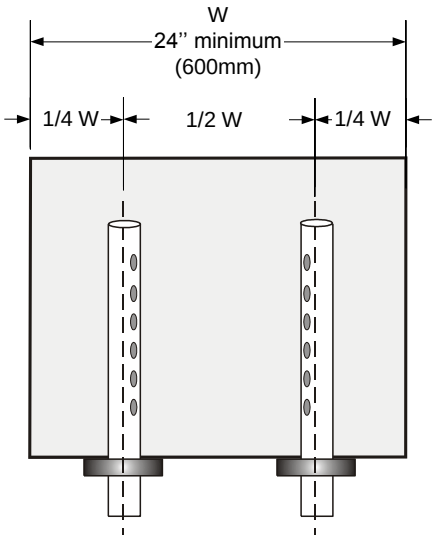

2 pipes *(Illus. 18)*

51mm diameter pipe

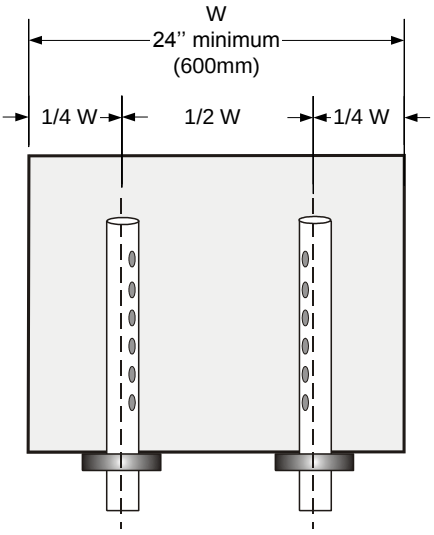

2 pipes *(Illus. 19)*

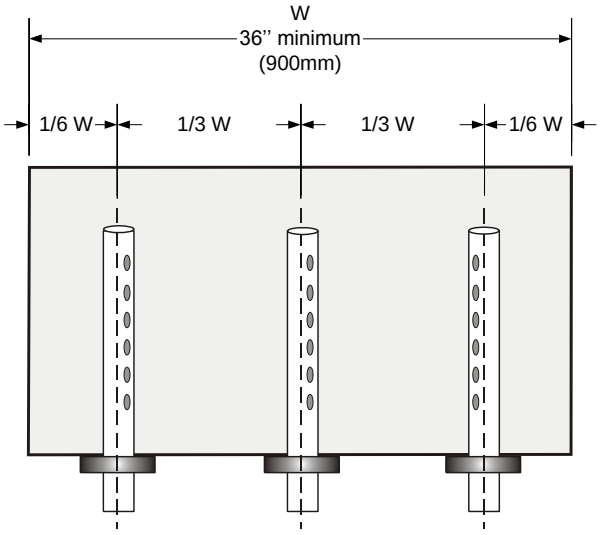

3 pipes *(Illus. 20)*

5. Steam output connection

5.1. Typical installation

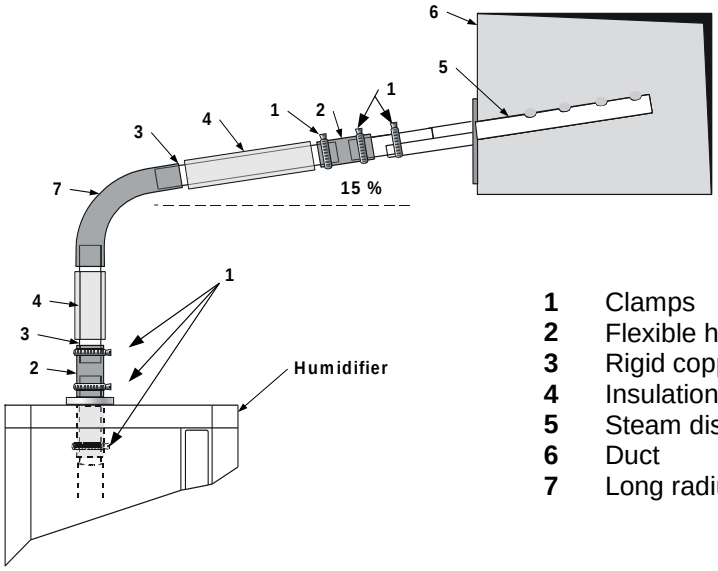

1 Clamps
2 Flexible hose
3 Rigid copper pipe
4 Insulation
5 Steam distribution manifold
6 Duct
7 Long radius copper pipe

(Illus. 21)

5.2. General recommendations

Please follow these general rules of installation in order to avoid any static pressure inside distribution pipes and into the humidifier evaporation chamber, and also to avoid any condensation accumulation.

a) **The slope of the steam hose (rigid or flexible) should not be less than 15%** (7 horizontal length for 1 vertical length) in order to ensure continuous drainage of condensation back to humidifier or to steam trap.
b) **Total length of the flexible steam hose should not exceed 5 meters.** Longer runs will result in added condensation losses. Whenever possible, use insulated copper piping. Flexible steam hose should be used for short runs (up to 5m) or for interconnecting between the rigid pipes.
c) **Whenever using rigid copper, these ones should be insulated to diminish condensation build up.**

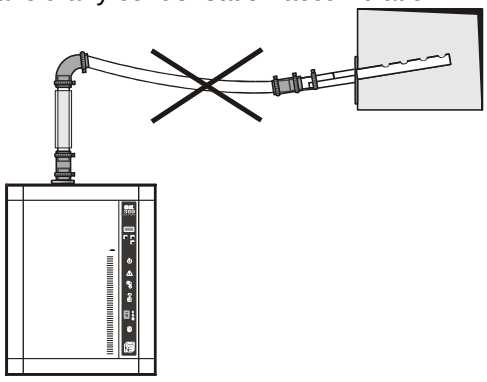

Incorrect installation
(Illus. 22)

5.3. Installation of "S" traps on the steam line

The lowest point of any steam hose or rigid pipe must be the humidifier. If necessary a steam separator (S trap) should be installed higher than the static pressure of the system by at least 51mm.

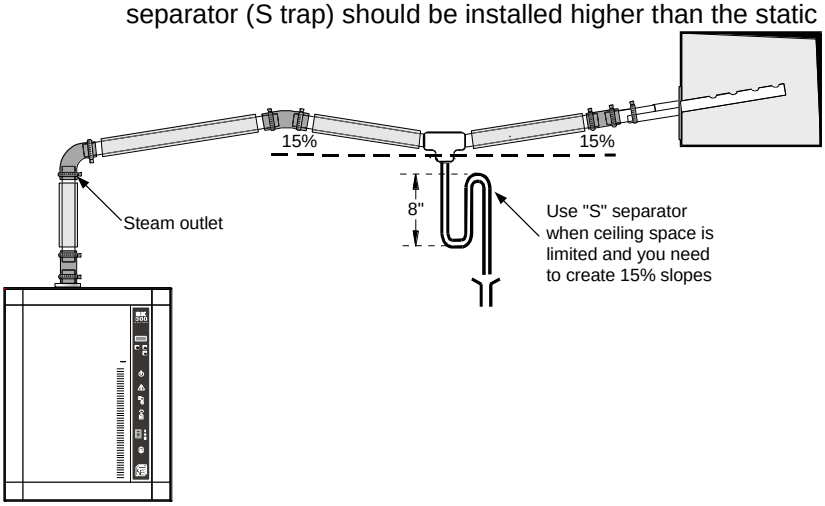

(Illus. 23)

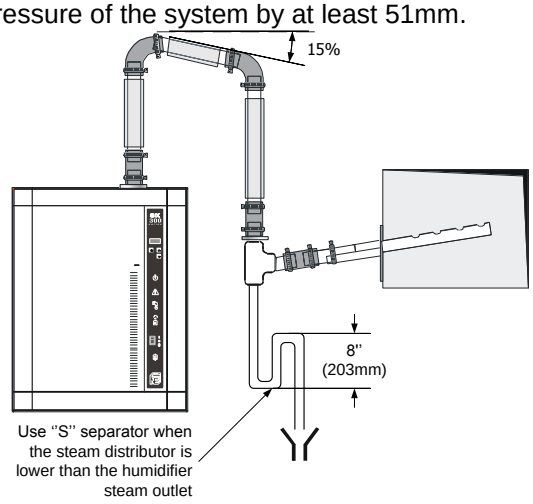

(Illus. 24)

5.4. Position of steam output

Model	Dimensions mm	
Small Cabinet	**I**	**J**
SKE05	110	122

Medium Cabinet	K	L	M
SKE10 **SKE20**	-	102	143
SKE30 **SKE40**	134	102	143

Large Cabinet	N	O	P	Q
SKE50 **SKE60** **SKE80**	179	179	132	144

Small Cabinet
(SKE05)

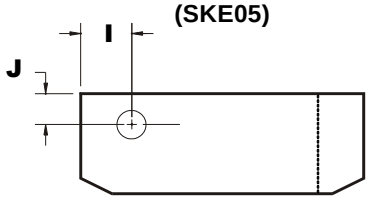

Medium Cabinet
(SKE10-20)

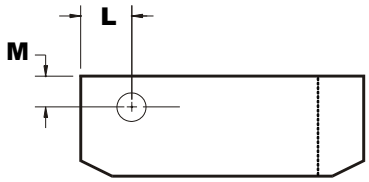

Medium Cabinet
(SKE30-40)

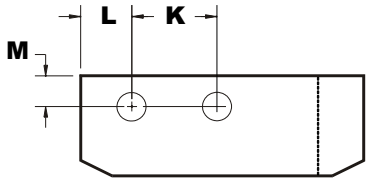

Large Cabinet
(SKE50-60)

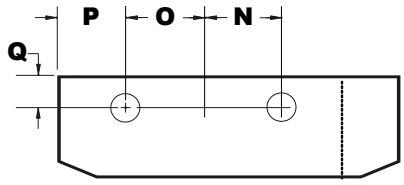

Large Cabinet
(SKE80)

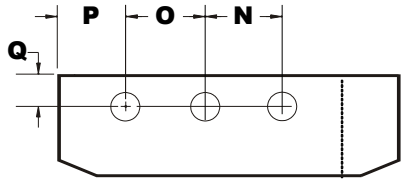

(Illus. 25)

5.5. *Installation of humidifier with Space Distribution Unit (SDU)*

- The SDU should be installed in an environment where the air is relatively clean. This will avoid the blower from getting clough with dust.
- The humidifier should be mounted such that the SDU fan section is at least 2m above the floor.
- A minimum clearance of 0.45m from the ceiling should be allocated to avoid ceiling and wall condensation.
  If additional ventilation is not present, the fan should have a clearance from the ceiling of at least 1.35m. Proper ventilation must be observed to avoid ceiling and wall condensation.

SDU remote installation:

- The SDU can be in a different location from the humidifier (remote SDU). Please follow the piping recommendations (section 5.2).
- Mount the SDU to the wall on brackets (not supplied), do not drill mounting holes thru the cabinet of the SDU.
- Connect the steam hose(s) to the bottom inlet(s) of the SDU to the top of the steam outlet(s) of the humidifier. Secure the hose(s) with the supplied hose clamp.
- Connect the condensate hose to the bottom of the SDU to an open drain.
- Connect the electrical wires from the SDU to the top of the humidifier. Field wiring must conform to local codes.

The fan of the SDU will operate for a period of four minutes after steam production has stopped to prevent condensation.

Avoid any obstruction of the ventilation openings on top of the SDU.

Maintenance of the SDU:

- Clean the blower if there is an accumulation of dust.

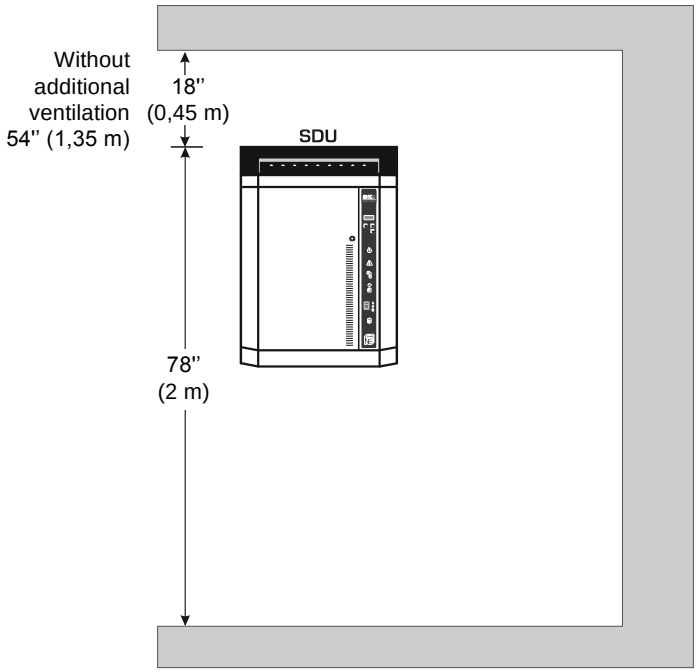

SDU mounted on humidifier *(Illus. 26)*

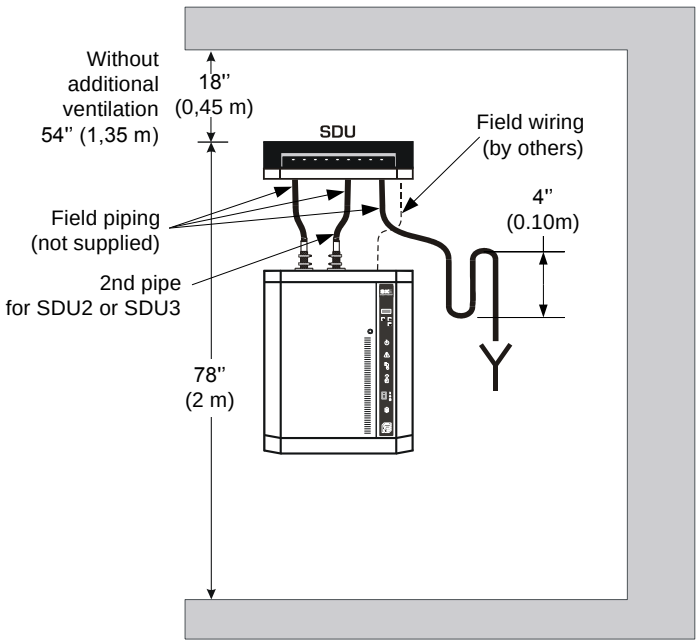

SDU remote installation *(Illus. 27)*

6. Plumbing connection

- **CAUTION:** Water supply installation should conform to local codes and regulations. Any installation work must be carried out by suitably qualified personnel.
- The operation of SKE series humidifier is independent of variable water conditions, with soft or hard water. Therefore, for normal operation, no pre-treatment of water is necessary.

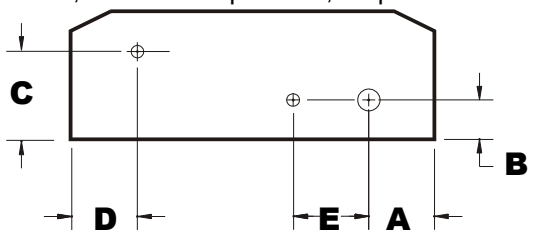

Bottom view (Illus. 28)

Model	Dimensions (mm)				
	A	B	C	D	E
SKE05	165	51	232	105	44
SKE10 **SKE20** **SKE30** **SKE40**	184	44	248	105	44
SKE50 **SKE60** **SKE80**	179	44	248	105	44

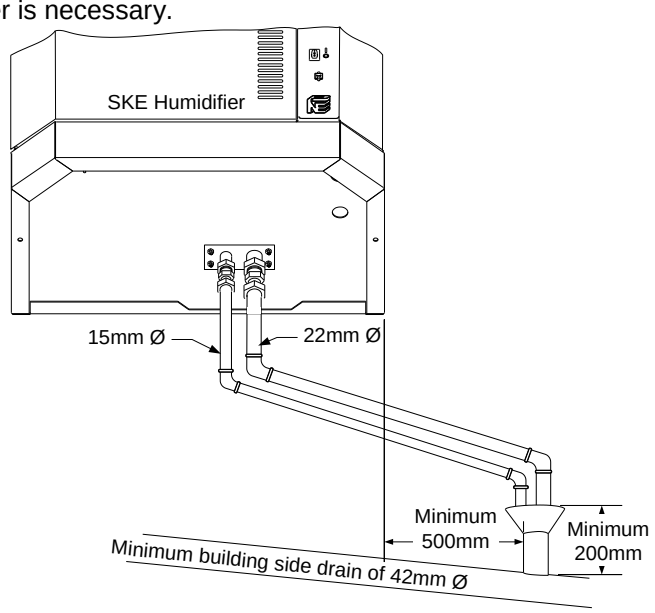

(Illus. 29)

6.1. Water supply

- Water inlet specifications:
  - ✓ Inlet water pressure: 0,7 to 4,8 bars (10 to 70 psig)
  - ✓ Maximum temperature: 30°C maximum
  - ✓ 3/8" (DN10) standard copper water line connection
- A shut off valve (not supplied) should be installed in the water supply line to the unit, close to the humidifier to facilitate servicing.
- It is recommended to install a standard water strainer in the water supply line.
- It is recommended to install a water hammer arrestor, in order to absorb hydraulic shock and minimize water hammer when the fill valve closes.

Please follow the steps described below:

- Connect 15mm water supply pipe to the flexible hose (supplied).
- Finger tighten the swivel top 20mm fitting to the male threaded part of the valve.
  CAUTION: RISK OF DAMAGE TO THE VALVE. DO NOT USE WRENCH TO TIGHEN SWIVEL.

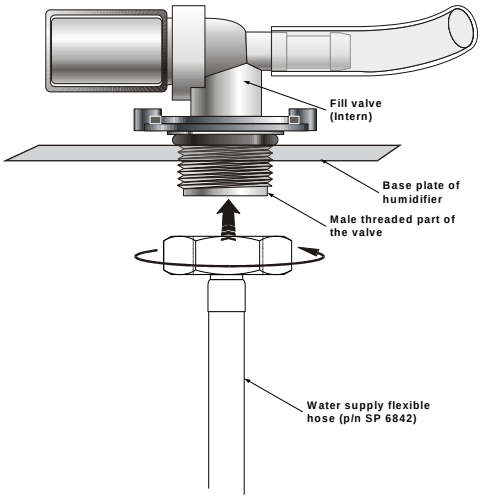

(Illus. 30)

6.2. Drain connection

- **CAUTION:** Water drain installation should conform to local codes and regulations. Any installation work must be carried out by suitably qualified personnel.
- Drain connection specification:
  - ✓ Evaporation chamber water drain temperature: 60°C.
  - ✓ Standard hydraulic compression fittings: a 20mm (evaporation chamber drain) and a 15mm (Pan drain).
- 2 hydraulic threaded fitting located under the humidifier (see Illus. 29) must be connected to the drain pipe.
- **Use standard copper hydraulic pipes 20mm and 15mm.**
- Ensure that the drain pipe dimension is sufficient, especially if more than one humidifier is evacuating into the same drain line.

6.3. Weather proof enclosure plumbing connection

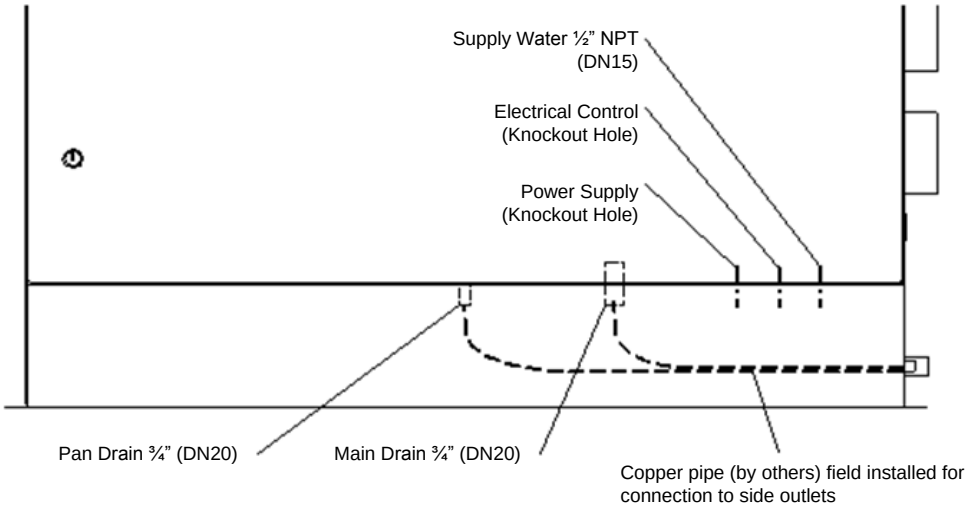

(Illus. 30a - Front view)

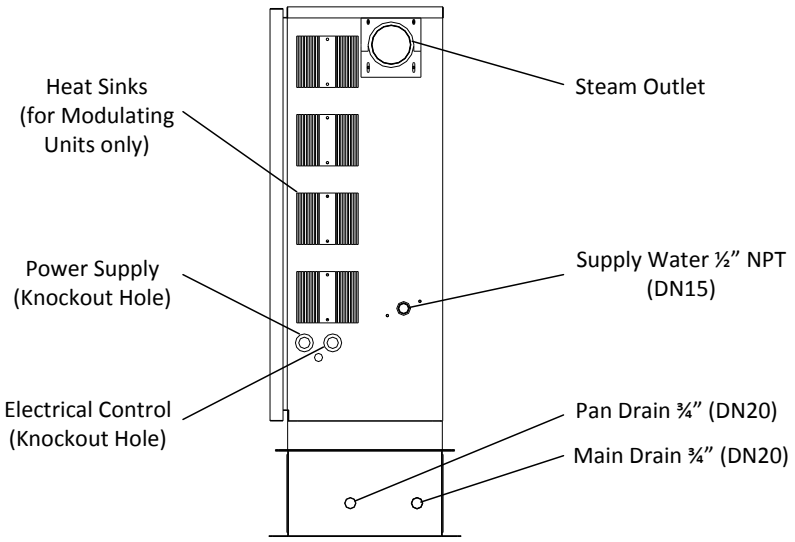

(Illus. 30b - Side view)

- The weather proof enclosure is equipped with a normally open valve, enabling the humidifier to drain all water during a power failure, in order to prevent water from freezing within the unit. During normal operation, the humidifier reduces drain water temperature to 60°C.

Caution: During a power failure, the drain water temperature is not reduced. Installed drain piping must be rated to 100°C.

7. Power supply connections

- **CAUTION**: RISK OF ELECTRIC CHOC. DISCONNECT THE HUMIDIFIER FROM THE ELECTRIC SUPPLY BEFORE TO PROCEED TO THE CONNECTION.
- **WARNING:** RISK OF FIRE. Do not interchange the power terminal block designated L1, L2 and L3 with Low voltage terminal block designated 1, 2 and 3.
- The wiring to the Humidifier should be done by a qualified electrician, and conforming to the procedure, regulation and local codes.
- Use only coppers conductors.
- An external over current protection and disconnect circuit breaker should be installed on the supply adjacent to the humidifier.
- A knock out (not supply) should be installed at the bottom of the electrical compartment of the humidifier for strain relief of the supply cable.
- Ensure that the size of the wire conductors is appropriate for the current supplied.
- Ensure that each terminal connection is properly secured.
- The ground conductor should be equipped with ring terminal and should be connected directly to the electrical panel on the indicated location.

1 Phase Connection

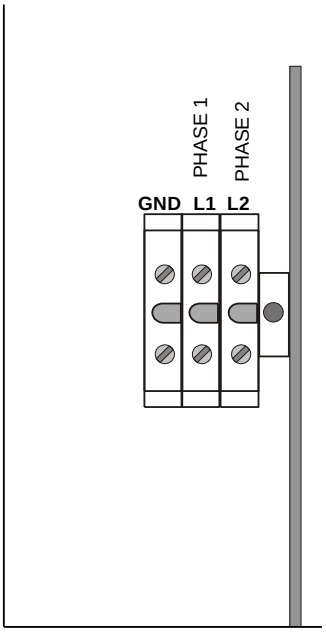

(Illus. 31

3 Phases Connection

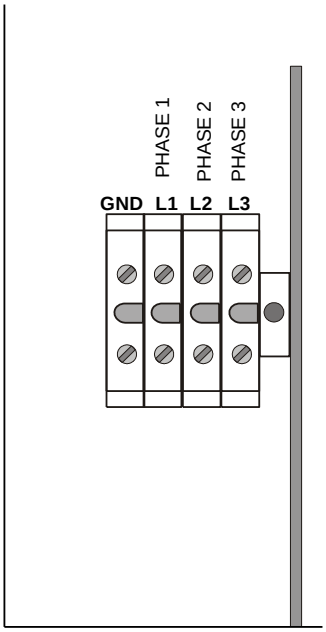

(Illus. 32)

8. Low voltage control connections

8.1. Modulating Humidifier

8.1.1. Humidity controlled by humidistat (external mode)

Connection to HRO20 humidistat.

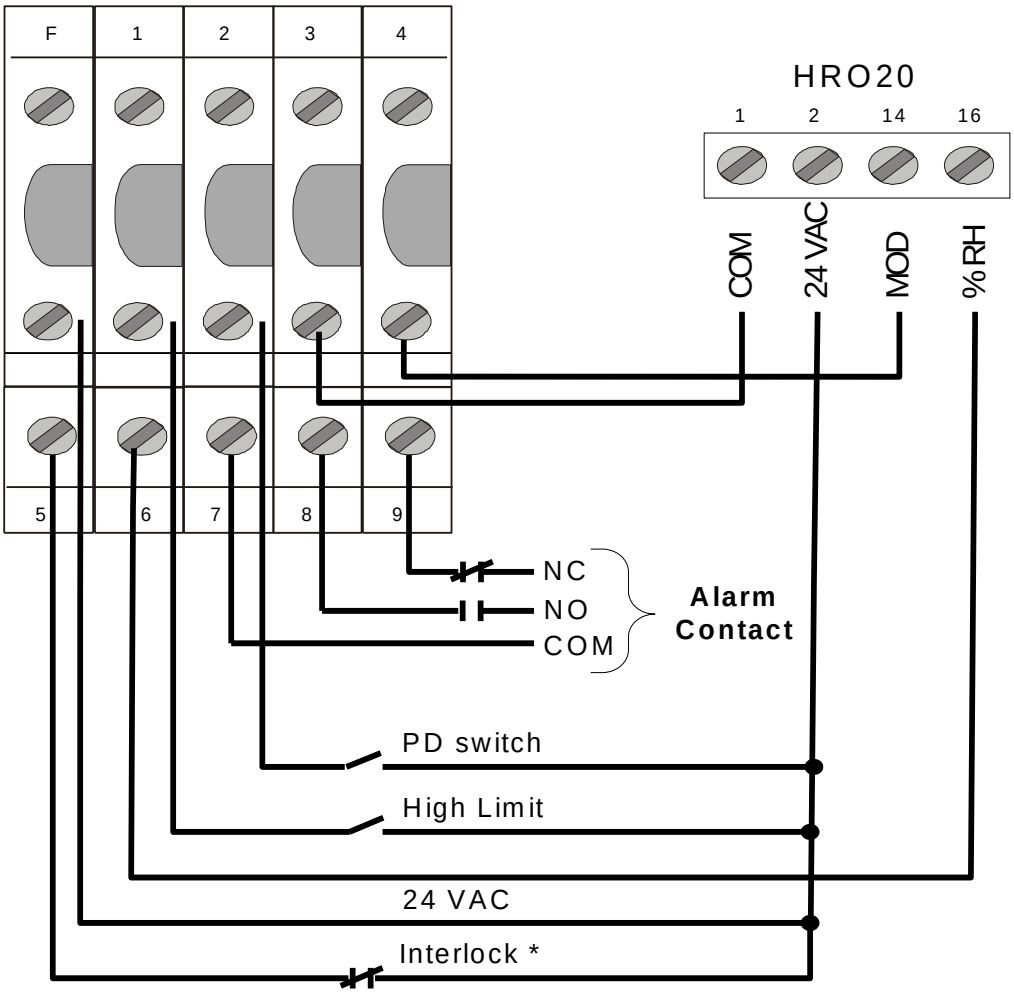

(Illus. 33)

Note: If interlock is not used, jumper between terminal F & 5 must be installed

Note: If the humidifier is equipped with a Space Distribution Unit (SDU), the PD switch is already factory wired inside the SDU, do not wire the terminal #2.

8.1.2. Humidity controlled by humidifier (internal mode)

Humidity controlled by humidifier, using SHR10 or SHC80 as space sensor.

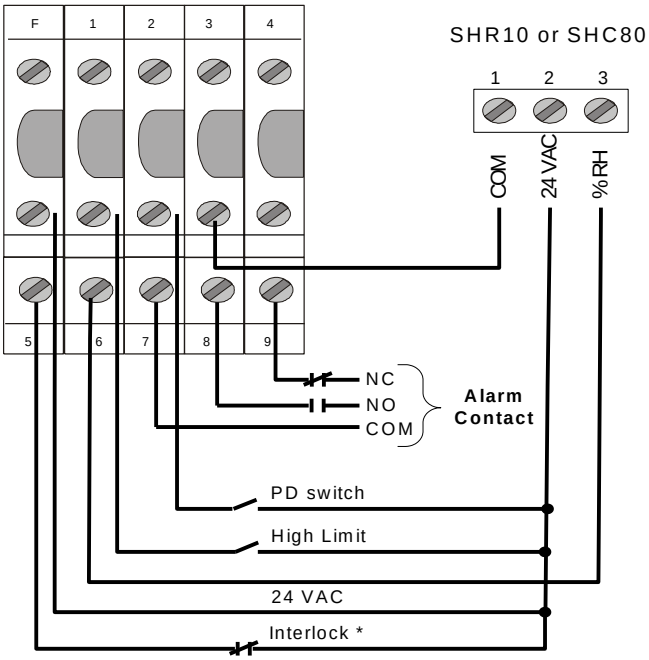

(Illus. 34)

Note: If the humidifier is equipped with a Space Distribution Unit (SDU), the PD switch is already factory wired inside the SDU, do not wire the terminal #2.

VAV system with humidity controlled by humidifier, using SHC80 as high limit duct sensor and SHR10 or SHC80 as space sensor.

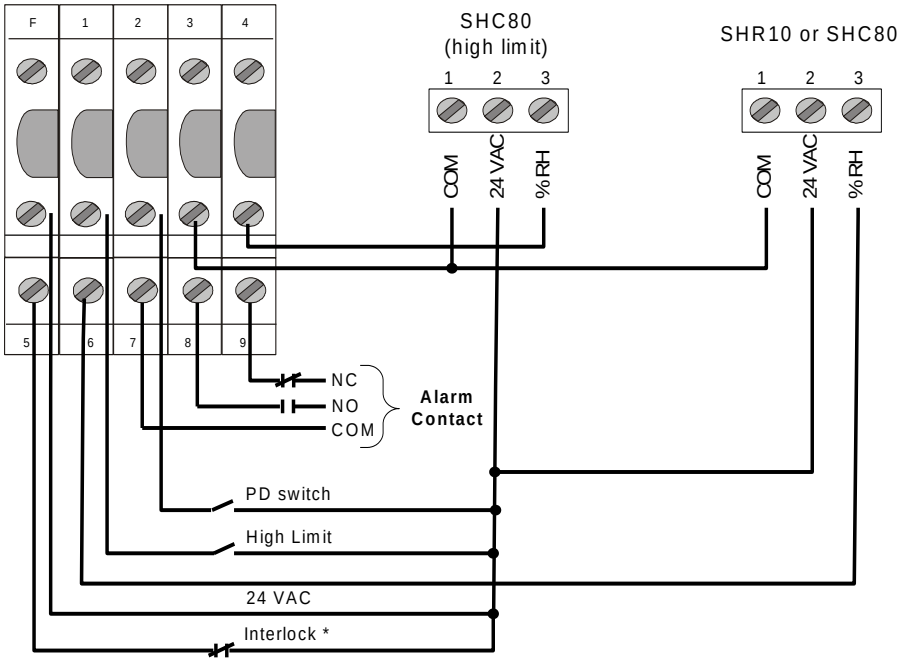

(Illus. 35)

Note: if interlock is not used, jumper between terminal F & 5 must be installed.

8.1.3. Control Signals

On BACNET SKE Humidifier the selection of the control signal is made through the menu. See §11.2 Please wire the control input to terminal 3 and 4 as indicated on the diagram beside

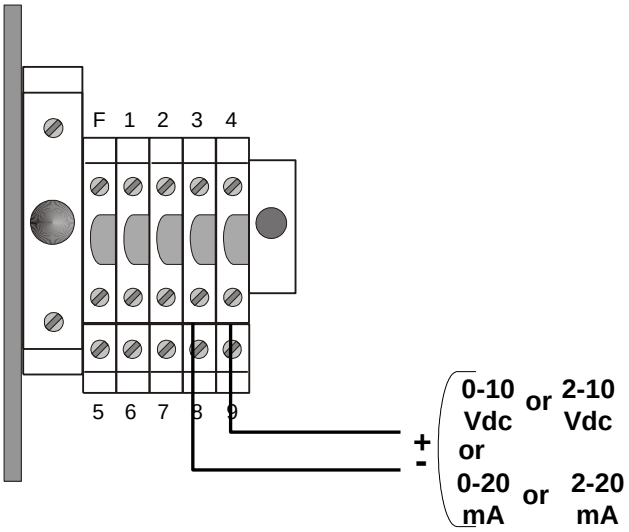

(Illus. 36)

8.1.4. Connection to remote SKRSR (space distribution unit)

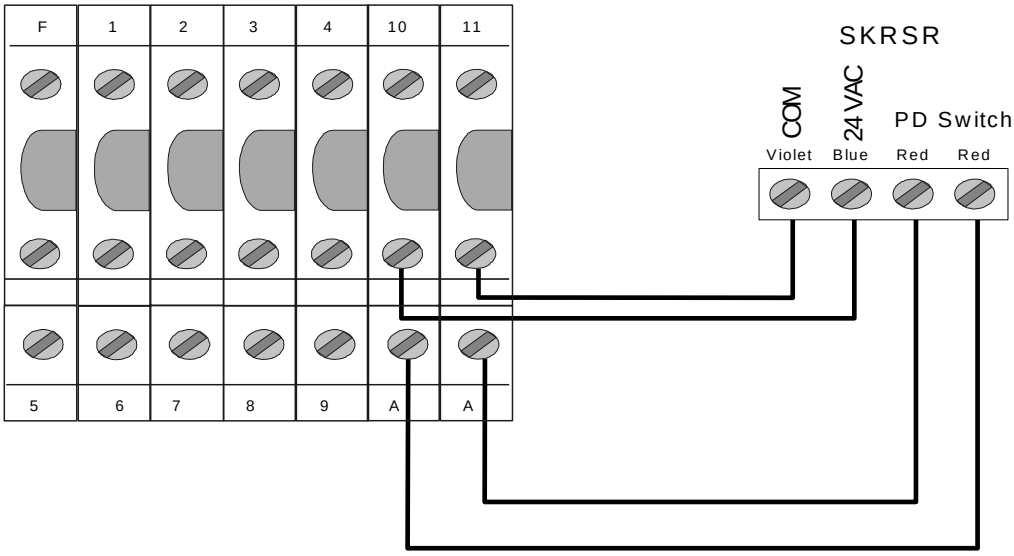

(Illus. 36a)

Note: When the humidifier is used with a Space Distribution Unit (SKRSR), the PD switch is already factory wired inside the SKRSR, do not wire the terminal #2 on the humidifier.

8.2. Common Alarm Connections

A volt free contact is provided in the form of both a normally open and normally closed contact that will switch in the event of an alarm on the SKE humidifier.

- Wherever possible it is recommended to use the normally closed contact. This contact will open in the event of a humidifier fault.
- These contacts should be used to switch a low voltage, ideally **24V**, with a switching current of no more than **3 Amps**.

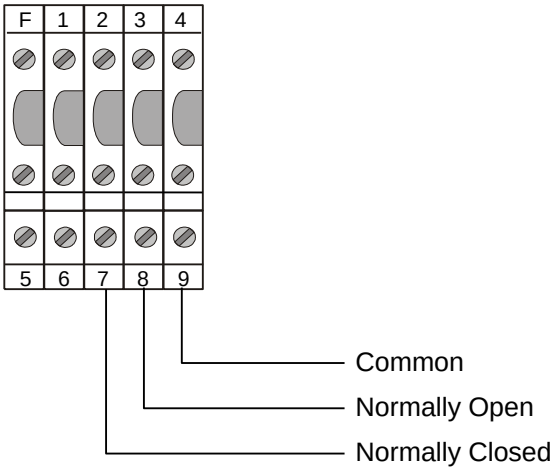

(Illus. 37)

8.3. Controls Placement (steam dispersed into a duct or AHU)

Typical humidifier control system should include along with the humidifier:

- A wall or return duct humidistat
- A high limit duct humidistat,
- An airflow switch.

Placement of these devices is critical to proper operation of the overall system.

- The return duct humidistat must always be located before any outside air intake, in order to ensure accurate sensing of the air from the humidified space.
- Alternatively a room humidistat can be used. The room humidistat should be located on an inside wall or column. It should not be be near any discharge air from supply ducts or sources of heat or cold.
- The airflow switch must be positioned to accurately open on a loss of air flow, to prevent the humidifier from running when there is no air to absorb humidity.
- The high limit humidistat must be positioned far enough, minimum 4.6m, downstream of the steam dispersion manifold(s) to prevent it from getting wet, but still allows it to accurately prevent overhumidification of the duct that could result in condensation.

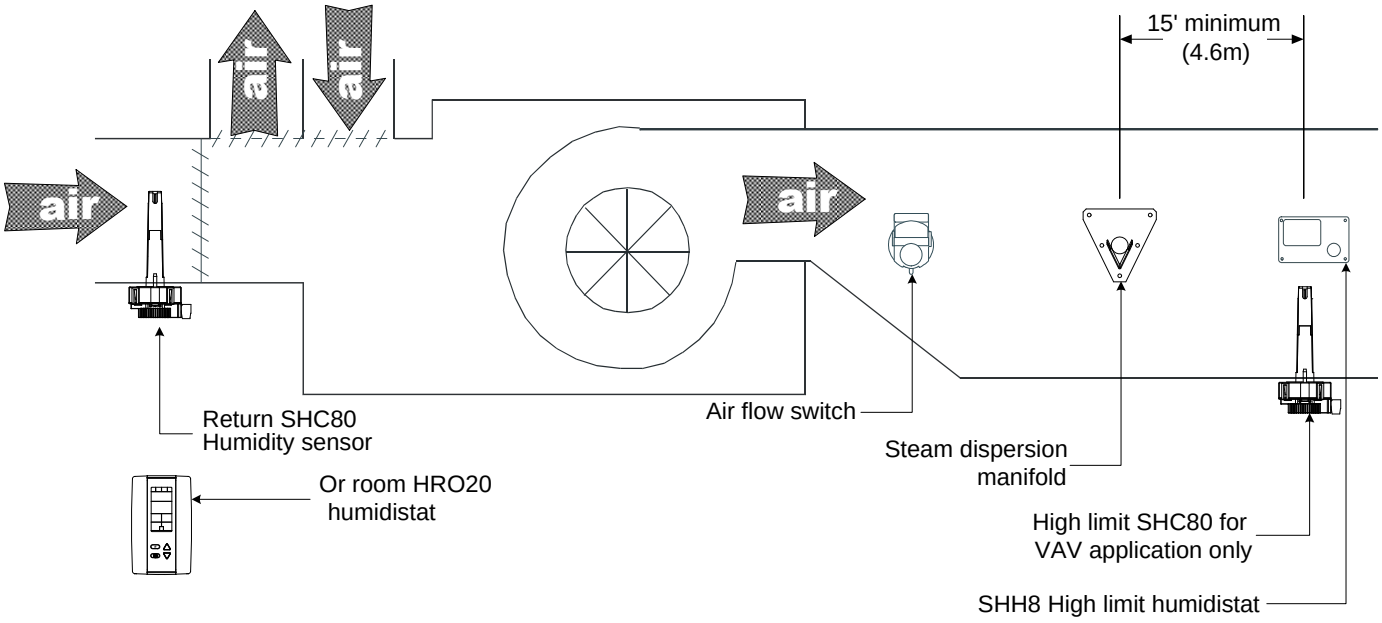

(Illus. 38)

9. BACnet® interface set-up

9.1. Locating BACnet interface PCB

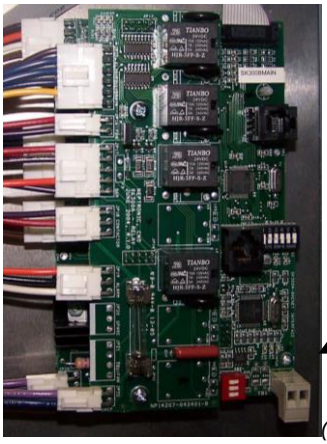

The BACnet interface PCB is located on the top right corner inside the electrical compartment.

BACnet interface PCB.

(Illus. 39)

9.2. BACnet® port and interface Dip switches setting

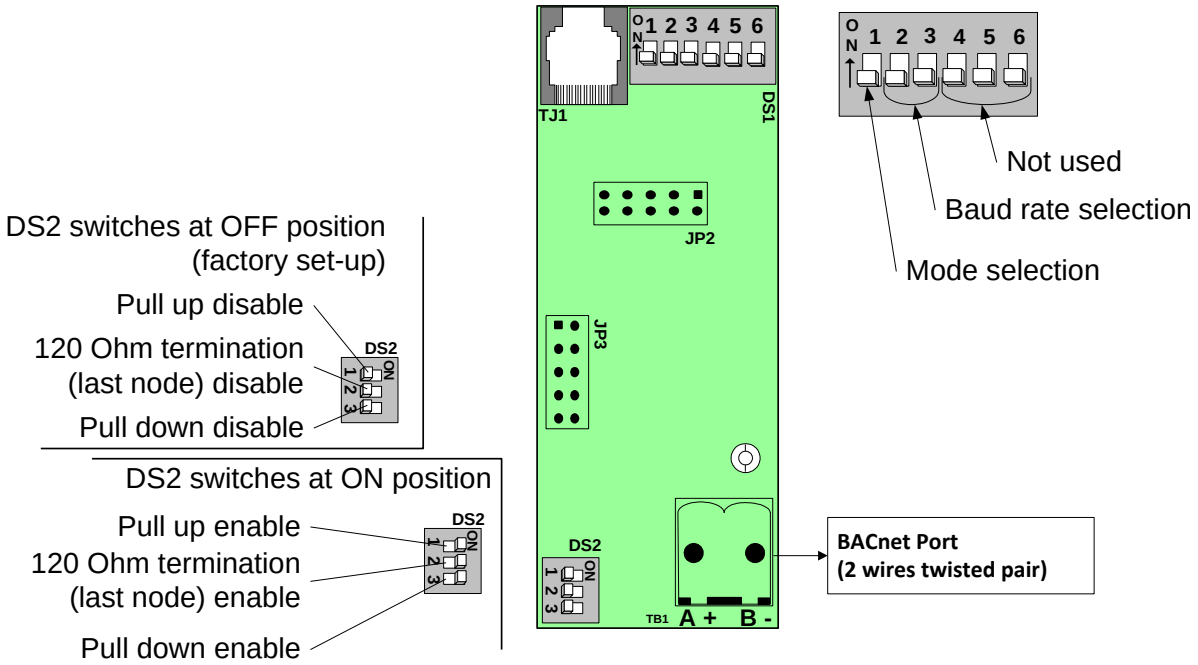

(Illus. 40)

DS1-1 : Mode selection
OFF = Mode Operational *(factory set-up)*
ON = Mode Configuration

DS1-2&3 : Baud rate selection		
Baud rate	*Switch #2*	*Switch #3*
9600	OFF	OFF
19200	ON	OFF
38400	OFF	ON
76800 *(factory set-up)*	ON	ON

10. Front panel display features

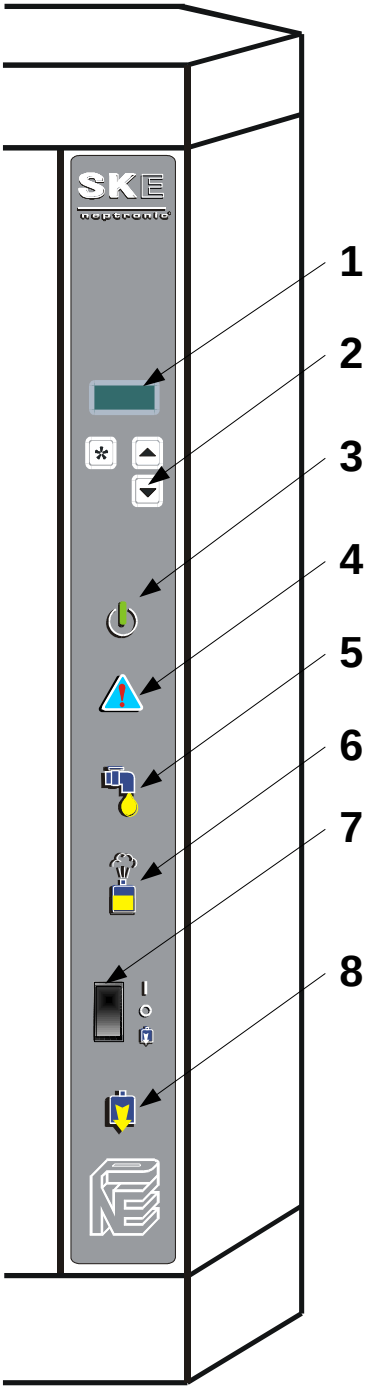

(Illus. 39)

1 Alphanumeric Display:
Indicates all operation parameters and the error messages (see section 14 – Trouble shooting).

2 Push button ✻, ▲ and ▼

✻	M button: Used to access into program mode.
▲ ▼	Up and Down button: Used to increase or decrease the controlled parameters of the humidifier.

3 "POWER" indicator

≥O≤	The humidifier is powered by electricity and the switch is at the AUTO position.
O	The humidifier is disconnected from the power supply.

4 "CHECK" indicator

≥O≤	The "CHECK" indication is normally off. It will go on as a warning against abnormal conditions of operation. For details consult the Alphanumeric Display (see section 10.3 Alarm messages).
≥O≤ *blinking*	Maintenance is required. The Running hours have exceeded the Service hours. (see section 12 – Service).
O	No abnormal conditions of operation.

5 "FILL" indicator

≥O≤	Indication that the water supply (fill) valve is open.
O	Indication that the water supply (fill) valve is closed.

6 "STEAM" indicator

≥O≤	For ON/OFF models, the STEAM indicator is ON when the contactor is closed and steam is being generated.
≥O≤ *blinking*	For modulating models, the STEAM indicator blinks ON and OFF in proportion to the percentage of steam output the humidifier is generating. (The proportion is displayed on the alphanumeric display (1)). When the output reaches 100%, the indicator stops flashing.
O	There is no steam being produced.

7 Switch "AUTO/OFF/DRAIN"

AUTO	Position AUTO (I): Humidifier will generate steam based on demand from the humidistat.
OFF	Position OFF (O): Humidifier will shut off.
DRAIN	Position DRAIN: Humidifier will stop operating and the evaporation chamber will drain the water out. This will be done tipically at regular service.

8 Indicator "DRAIN"

≥O≤	Drain pump is on, whether as a result of an automatic drain cycle or because the front panel switch is manually set to DRAIN.
O	Drain pump is off.

10.1. "OFF" Mode

- When the rocker switch is in the "OFF" position, the display shows the model of the unit and the program version number.
- By pushing the * button on control panel, you can access to the serial number of the humidifier.

SKEBXXM
NEP r1.7

(Illus. 42)

10.2. Scroll Mode

When the rocker switch is in the auto position, the display scrolls the following information every 6 seconds:

Display	*Description*	*Comment*
HUMIDITY 45.2%	Percent of relative humidity	Only on modulating units (suffix M).
DEMAND 92%	Percent of demand	Control signal input respand from 0-100%
OUTPUT 100%	Percent of output of the humidifier	Capacity output of the humidifier.
WATR LVL 92%	Water level in percent to the objective	100% correspond to optimum water level in evaporation chamber.
WATR TMP 65C	Water temperature in Celscius	Water temperature inside the evaporation chamber.

10.3. Alarm messages

When the following conditions occur, the alarms messages override the scrolling information:

Display	*Description*	*Comment*
AIR FLOW OPEN	Air flow proof	The airflow is not detected by the air pressure switch (modulating unit only).
HI LIMIT CUT-OUT	Hi limit cut out	Humidity level has exceeded the set point on the high limit humidistat.
DRAIN CYCLE	Drain cycle	The unit is in the automatic drain mode
OVER HEATED	Overheated	The temperature inside the container has exceeded the boiling temperature. The humidifier has automatically shut off
PROBE DEFECTED	Defective probe	The water level sensor is not operational. The humidifier has automatically shut off

Display	*Description*	*Comment*
NO LEVEL	No water	Water has not reached the level probe. This message appears when turning on the humidifier if the evaporation chamber is empty.
CLEANING REQUIRED	Cleaning required	The humidifier has reached the number of hours of operation and requires cleaning of the evaporation chamber with no interruption o fthe operation of the humidifier.
SERVICE UNIT NOW	Service unit now	The humidifier has reached the number of hours of operation and requires service. The operation of the humidifier is interrupted.
FOAMING CYCLE	Drain foam	AFEC (Anti Foam Energy Conservation) detects foam. The unit drains for a few minutes and returns to normal operation.
DRN/PROB BLOCK	Drain or probe block	The DRAIN indicator is on but the water level does not decrease, the humidifier has automatically shut off.
KLIXON OPEN	Klixon open	Temperature in the evaporation chamber exceeded the preset temperature of the high temperature switch.
PCB FUSE OPEN	PCB Fuse open	Internal 24vac is shorted.
24 VAC SHORTED	24 VAC Shorted	External 24vac (for humidity) controller is shorted or over loaded.
24 VDC SHORTED	24 VDC Shorted	Internal 24vdc (probe or fan) is shorted.
REFILL TIME OUT	Refill time out	Time to fill the evaporation chamber exceeded the preset time in the microprocessor.
WATR TMP DEFECTED	Defective water temperature sensor	The water temperature sensor is not present or defective.
SSR OVER HEATED	SSR Overheated	The temperature of the SSR is too high. Verify the operation of the cooling fan.
INTERLCK OPEN	Interlock Open	Interlock safety is open. Humidifier is stopped.
END OF SEASON	End of season	When there is no humidity demand for a period of more than 72 hours, the humidifieir will drain the water from the evaporation chambers automatically and will stay into a stanby mode.

10.4. Programming mode

To enter into programming mode you just have to push the button at any time, to advance the program function to the next programming step in the menu push the same button twice.

Use the and buttons to choose from the proposed values or to change value.

Seq #	*Display*	*Description*	*Values*
01	CONTROL EXTERNAL	Selection of Control mode. If External is selected, the control demand will be received by the control input; if Com Port is selected, the control demand will be received by the communication port (BACnet option).	Internal or External or Com Port Default: External
01A	SP SOURC INTERNAL	Selection of the Set Point Source (Control Internal only). Selection of source for room humidity set point.	Internal or External or Com Port Default: Internal
01B	SETPOINT 40% RH	Selection of room relative humidity set point. (SP Source Internal only)	Percentage From 10 to 90%
01C	DUCT SRC DISABLE	Hi limit control mode. Selection of the source for the duct high limit relative humidity (Control Internal only).	Disable or External or Com Port Default: Disable
01D	DUCT SP 80% RH	Selection of high limit relative humidity set point. (Duct Source External only).	Percentage From 10 to 90%
02	DRAIN 8 HRS	Setting of automatic drain cycle of evaporation chamber. *Note: In general, harder the water is, more often the drain cycle should be. Drain cycle setting does not affect the AFEC system.*	From 1 to 24 hours Increment: 1 hour Default: 4 hours.
03	RUNNING 0645HRS	Number of running hours reading and reset To reset this counter: After service has been done, press simultaneously the and buttons for 30 seconds to reset the number of hours of operation to zero.	N/A
04	SERVICE 1000HRS	Hour span between services. *Note: In general, harder the water is, lower the number of hours of operation before service should be.*	From 400 to 1500 hours. Increment: 100 Default: 1000 hours.
05	LOCK ON 80% PWR	Selction of humidifier capacity reduction. *i.e.: In this case, the humidifier will deliver 80% of its maximum rated output when at full demand.*	From 00 to 100%. Increment: 1% Default: 100%
06	RESET ALRM NO	Reset of alarm To reset an alarm, press simultaneously the and buttons.	Yes or No Default: No

07	CTRL INP 2-10 VDC	Control signal input selection.	0-10VDC, 2-10VDC, 0-20mA or 4-20mA Default : 2-10VDC
08	HUM. INP 2-10 VDC	Humidity signal input selection.	0-10VDC, 2-10VDC, 0-20mA or 4-20mA Default : 2-10VDC
09	DUCT INP 2-10 VDC	Duct Humidity signal input selection.	0-10VDC, 2-10VDC, 0-20mA or 4-20mA Default : 2-10VDC
10	SKEBXXM NEP r1.7	Revision level of the program installed	N/A

Note:

1. Any changes made in the Program Mode are saved into a non-volatile memory.

10.5. User Adjustment & Diagnostic menu

To enter to User adjustment & diagnostic menu: press and hold ▼ (down) then press ★ (menu).

Seq #	Display	Type	Description	Value
01	SSR TmP 40 C	Reading	SSR Temperature reading	N/A
02	WTR TOFF 100 C	User adjustment	Water temperature offset user adjustment	Range: from -10˚C to +10˚C Default: **0**
03	WTR FREQ 8000 Hz	Reading	Water level frequency reading	N/A
04	WTR LOFF 100 %	User adjustment	Water level offset user adjustment	Range: from -10% to +10% Default: **0%**
05	FOAM PRB 207	Reading	Foaming probe value reading	N/A
06	Drn Tm Out 5 min	User adjustment	Drain time user adjustment	Range: from 4 to 16 min Default: **SKE05: 5 min.** **SKE10 to 40: 7 min** **SKE50 to 80: 8 min.**
07	No Demnd 72 HRS	User adjustment	Delay to drain out the humidifier from its remains water when there is no demand, in order to prevent bacteria growth	Range: from 1 to 250 Hrs Default: **72Hrs**
08	Hold Tmp OFF	User adjustment	Holding temperature of the evaporation chamber for fast response to demand	Range: from 15 to 90˚C or OFF Default: **OFF**
09	Anti-Frz OFF	User adjustment	Anti freezing temperature for the evaporation chamber for humidifier to be installed in weather proof enclosure.	Range: from 4 to 10˚C or OFF Default: **OFF**
10	ALARM Beep ON	User adjustment	Alarm beep, to be selected ON or OFF	Range: ON or OFF Default: **OFF**
11	T Unit CELSIUS	User adjustment	Temperature unit scale Celsius or Fahrenheit	Range: Celsius or Fahrenheit Default: **Celsius**
12	CONTRAST 25	User adjustment	LCD Display contrast level	Range: from 0 to 40 Default: **25** (legible LCD)
13	**SKEBXXM NEP r1.7**	Reading	Model of humidifier and revision number of program installed.	N/A

11. Start up procedure

We recommend to strictly following this start-up procedure in order to avoid any anomaly resulting from wrong cleaning of the components.
In case of problem or discrepancy see section 14 – Trouble shouting guide.

1. Make sure that mechanical, electric and plumbing connection are done and secured.

2. Make sure that low voltage control circuit is done and correct.

3. Turn on the water shut off valve (outside of the humidifier) and check that the drain connections are connected to the main drain line of sufficient diameter.

4. Turn on the power to the humidifier from the circuit breaker disconnect. The POWER indicator should go on.

5. Press the front switch to the AUTO (I) position.

6. Perform a manual cleaning cycle.
   a) The fill cycle is activated automatically when the evaporation chamber does not contain water.
   b) When the FILL indicator is off, press the front switch to the DRAIN position.
   c) The DRAIN indicator will come on and the water fill drain forom the evaporation chamber.
   d) After 3 to 5 minutes when the evaporation chamber is empty, press the front switch to the AUTO position.
   e) Repeat steps a to d one more time to ensure proper cleaning of the evaporation chamber.

7. Your humidifier is now fully operational. The SKE humidifier will produce steam upon demand from control(s).

12. Service

12.1. General

- The humidifier is set to give service demand on the alphanumeric display and on the CHECK light after is has reached the service hours setting (see section 10.4- Programming mode).
- The routine service is a cleaning of the evaporation chamber.
- We recommend setting the service demand depending on the water quality, the frequency of automatic drain cycles and the demand placed on the humidifier.
- The manual cleaning frequency can be from every 2 months to once a year.

12.2. Evaporation chamber cleaning

WARNING: RISK OF BURN. THE EVAPORATION CHAMBER AND ITS CONTENT CAN BE EXTREMELY HOT, CHECK TEMPERATURE BEFORE HANDLING.

1. Cool down evaporation chamber

- Set the front panel switch "AUTO/OFF/DRAIN" to DRAIN. The humidifier will command a drain cycle.
- Ensure that the evaporation chamber is completely empty. When it is empty, set the front panel switch "AUTO/OFF/DRAIN" to AUTO, the evaporation chamber will be fill with cool water; the FILL light will be illuminated.
- As soon as the evaporation chamber is full of cool water, the FILL light will extinguish, Set the front panel switch "AUTO/OFF/DRAIN" to DRAIN again.
- At the end of this drain cycle, check the temperature of the evaporation chamber, to do so, open the front door of the humidifier and touch the evaporation chamber with the back of your hand, If it is cool enough you can go the sequence #2 if not repeat the cool down operation until it will be cool enough.
- Set the front panel switch "AUTO/OFF/DRAIN" to OFF

2. *Shut down of the electrical supply*

CAUTION: RISK OF ELECTRIC SHOCK. SHUT DOWN THE ELECTRIC SUPPLY OF THE HUMIDIFIER

- Turn off the main power supply to the humidifier.

3. Disconnection of heating element(s)

- Remove the high voltage connector located at the top right hand side of the mechanical compartment.
  - Model SKE05: Unscrew the connector.
  - Model SKE10 to SKE80: squeeze the locking ears of the high voltage connector and pull it apart.

4. Disconnection of the other accessories.

- Disconnect the connector from the water level sensor; this connector is attached to a cable that enters the mechanical compartment just below the high voltage connector. Squeeze the locking ear of the connector and pull it apart.
- Remove the connection to the high limit sensor (klixon), located on the top cover of the evaporation chamber.

5. Disconnection of steam hose and water pipe

- Remove the steam hose(s) at the top of the evaporation chamber.
- Remove the water drain/fill connection to the evaporation chamber. To do this, unscrew the nipple located on the lower right hand side of the evaporation chamber.

6. Removing the evaporation chamber

- The evaporation chamber may now be freely removed from the humidifier cabinet.
- **CAUTION**: The evaporation chamber still contains 25mm of water, ensure that you do not reverse this water on yourself.
- Make sure that your footing is secure when lifting out the evaporation chamber. On large humidifier (SKE50 to SKE80) it may weigh more than 15 Kg. This operation may require another person to assist you in removing the evaporation chamber.

7. Opening of the evaporation chamber

- Remove the cover from the evaporation chamber.
  - Model SKE05: Unlatch the 3 latches located around the evaporation chamber, *caution: these latches are very tight, we recommend you to help you with a screwdriver or pliers to do this.*
  - Model SKE10 to SKE80: Turn the latches of the 4 or 8 latches located around the evaporation chamber.
- Remove the cover from the evaporation chamber.

8. ***Cleaning of the evaporation chamber***

- Pour out any remaining water and scale that is on the bottom of the container
- To clean out the remaining scale from the container, use a stiff brush (synthetic filament only) and some vinegar or any weak acid for cleaning stainless steel.
- **WARNING**: The use of wire brush or any non-recommended acid will void the warranty.
- If the amount of scale to remove is very important, the service demand frequency is too low for the quality of supply water, you should then adjust this service demand frequency (see section 10.4 – Programming mode). Too much scale may impair the normal operation of the humidifier or damage it; in this case warranty will be voided.

9. ***Cleaning of the other components***

- The components installed on the cover (heating element and water level sensor) and the cover itself should be cleaned as necessary, only if some scale has been accumulated on them.
- Proceed as per the cleaning of the container (step #8).
- Removing and cleaning of the water level sensor.
  A chamber protects the water level sensor. Cleaning of the sensor requires removing this chamber.
  - Unscrew the 2 screws holding the chamber, located on the cover.
  - Carefully remove the chamber, do not touch or damage the water level sensor.
  - Clean out the water level sensor by using a clean soft cloth.

  CAUTION: The water level sensor is covered by a thin lay of Teflon, any scratch or damage to this lay of Teflon may provoke failure of the humidifier.
  - Clean or the chamber by proceeding as per the main container (see step #8).
  - Re-attach the clean chamber to the cover and screw in the 2 screws on the top of the cover.

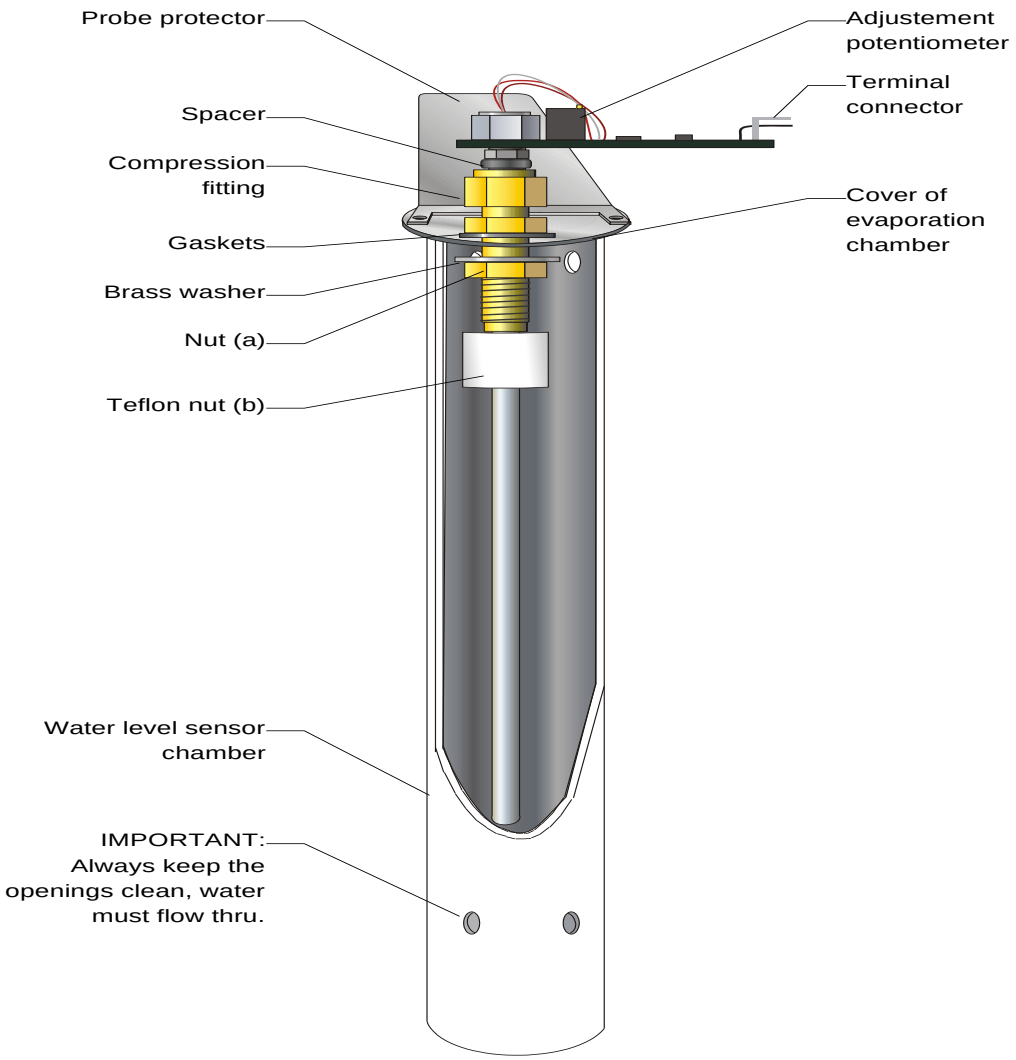

(Illus. 43)

10. Re assembly of the evaporation chamber

- Rinse out the container and the cover with water.
- Check the cover gasket, and make sure that the gasket is well placed before to re-install the cover on the container. The water level sensor should be in front of the drain/fill connection of the evaporation chamber.
- Tighten the latches around the cover (3,4 or 6).
- Replace the evaporation chamber in the humidifier.
- Tighten the water drain/fill connection nipple.
- Replace the steam hose(s) on the outlet of the evaporation chamber.
- Reconnect the connector of the water level sensor, high temperature switch (klixon) and the high voltage connector of the heating element.
  CAUTION: RISK OF FIRE. MAKE SURE THE HIGH VOLTAGE CONNECTOR IS PROPERLY LOCKED. AN UNPROPER CONNECTION MAY PROVOKE ELECTRIC ARCS.

11. Start-up of the humidifier

- Turn on the main power supply to the humidifier.
- The POWER light of the front panel should be illuminated.
- Press the * button to enter the programming mode, to reset the Running hours (see section 10.4-Programming mode Step 3).
- Set the front panel switch "AUTO/OFF/DRAIN" to AUTO. The humidifier will command to fill the evaporation chamber with water; the FILL light should be illuminated.
  It is possible that the CHECK light will illuminate because the evaporation chamber is empty. This signal will extinguish as soon as the normal condition will be reach.
- If there is a humidity demand, the humidifier will produce steam again.

Exploded view & Bill of Material

13.1. Exploded view

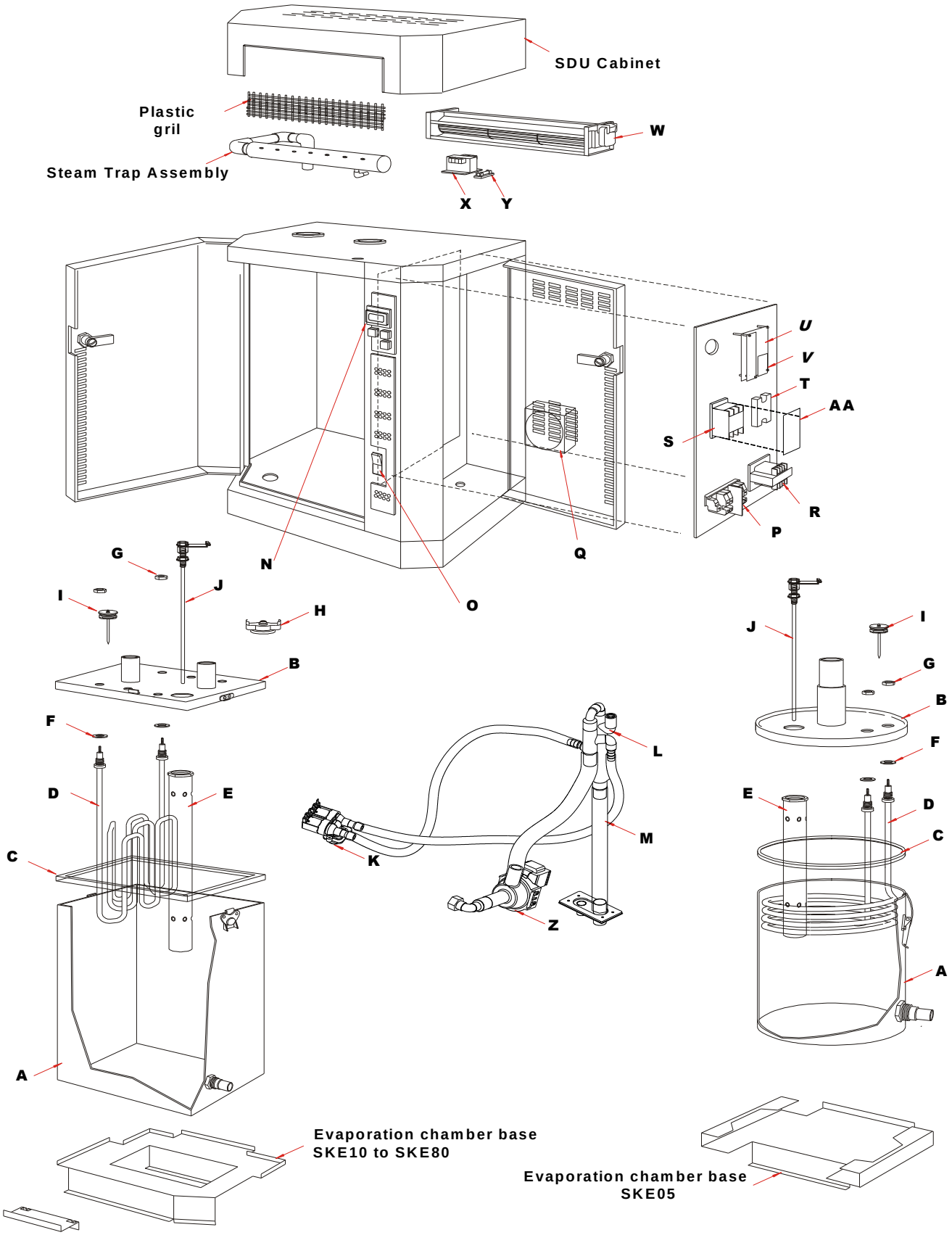

(Illus. 55)

13.2. Bill of Material

Item	Description	Model	Part number
A	Container of evaporation chamber	SKE05	SW CONTSMA-ASSY
		SKE10 to SKE40	SW CONTMED-ASSY
		SKE50 to SKE80	SW CONTLAR-ASSY
B	Cover of evaporation chamber	SKE05 (1 phase)	SP 4018-M
		SKE05 (3 phases)	SP 4019-M
		SKE10 & SKE20	SP 4183A
		SKE30 & SKE40	SP 4183B
		SKE50 & SKE60	SP 4186
		SKE80	SP 4185A
C	Evaporation chamber gasket	SKE05	SP 1008
		SKE10 to SKE40	SP 1021
		SKE50 to SKE80	SP 1022
D	Heater element	See table below	
E	Level sensor chamber	SKE05	SP 4196-M
		SKE10 & 20	SP 4197-M
		SKE30/40/50/60/80	SP 4198-M
F	Washer (elements)	SKE05 to SKE80	SP 1005
G	S/S hex. Jam nut (elements)	SKE05 to SKE80	SP 2330
H	High temperature switch (klixon)	SKE05 to SKE80	SP 3035
I	Foam sensor	SKE05	SW FOAMSM-ASSY
		SKE10 to SKE40	SW FOAMMED-ASSY
		SKE50 to SKE80	SW FOAMLG-ASSY
J	Water level sensor	SKE05	SW SK3BPROBSMAR1
		SKE10 & 20	SW SK3BPROBMEDR1
		SKE30/40/50/60/80	SW SK3BPROBMEDR1
K	Water supply valve	SKE05 to SKE80	SP 6007
L	Fill and drain trap assembly	SKE05	SW TRAPSMA-P
		SKE10 to SKE40	SW TRAPMED-P
		SKE50 to SKE80	SW TRAPLAR-P
M	Silicone tubing ½”	SKE05 to SKE80	SP 1023A
	Silicone tubing ¾”		SP 1023B
	PCV tubing ½”		SP 1027
N	Alphanumeric display	SKE05 to SKE80	NW SK300BDISPSS
O	"AUTO/OFF/DRAIN" rocker switch	SKE05 to SKE80	SP 3037
P	Terminal block and high voltage connectors	SKE05 to SKE80	/
Q	Cooling fan	SKE05 to SKE80	SP 3007
R	Transformer	See table below	
S	Contactor	See table below	
T	Solid State Relay	50 A	SP 3102
		90 A	SP 3103
		125 A	SP 3105
U	Main Printed circuit board	SKE05 to SKE80	NW SK300BMAIN-TES
V	BACnet interface printed circuit board	SKE05 to SKE80	NW SK300BBACNETSS
W	SDU fan	SDU I	SW FANSDU1-RET
		SDU II	SW FANSDU2-RET
		SDU III	SP 3010
X	Transformer	See table below	
Y	Fuse inside SDU	SDU I and SDU 2	SP 5105
		SDU 3	SP 5106
Z	Drain pump	SKE05 to SKE80	SP G4101

Item	***SKE05***		***SKE10***		***SKE20***	***SKE30***	***SKE40***	***SKE50***	***SKE60***	***SKE80***
	230V/1~	400V/3~	230V/1~	400V/3~	400V/3~	400V/3~	400V/3~	400V/3~	400V/3~	400V/3~
D Heater element	SW 5937	SW 5980	SW 5983	SW 5981	SW 5982	SW 5983	SW 5955	SW 5984	SW 5983	SW 5955
R Transformer	SP 3365	SP 3374	SP 3365	SP 3374	SP 3374				SP 3374	
S Contactor	SP 3029	SP 3080	SP 3083	SP 3080	SP 3100	SP 3100	SP 3084	SP 3084	SP 3100	SP 3084
X SDU Transformer	SP 3373	SP 3373	SP 3371	SP 3376		SP 3370		-	-	-

14. Trouble shouting guide

Problem	Indicator	Display	Causes	Corrective actions
Humidifier does not operate (Power Off)	Power: Off Check: Off Fill: Off Steam: Off Drain: Off	Blank display	• The humidifier is not powered. • Wires harnesses inside the humidifier are not secured properly.	• Check for the main power supply and fuses. • Check the transformer, the low voltage fuse. • Check the wires harnesses and the Main pc board.
Humidifier does not operate (Power On)	Power:Blink Check: Off Fill: Off Steam: Off Drain: Off	SKEBXXM NEP r1.7	• The rocker switch is at the OFF position. • Wire harness from the LED display panel to the Main pc board is not secured properly.	• Press the rocker switch to the AUTO position. • Check the white color wire harness.
Humidifier does not produce steam (No Demand)	Power: On Check: Off Fill: Off Steam: Off Drain: Off	DEMAND 0%	• Modulating unit: no analog signal. • On/Off unit: no demand from humidistat. • Control wires are not properly secured to the terminal blocks.	• Verify the setting of the humidistat. • Verify the connections of the wires to the control terminal blocks.
Humidifier does not produce steam	Power: On Check: Off Fill: Off Steam: Off Drain: Off	AIR FLOW OPEN	• Air flow is not detected by air pressure switch. • Control wires are not properly secured to the terminal blocks.	• Check the fan operation. • Verify the wires to the control terminal blocks #F & 2.
Humidifier does not produce steam	Power: On Check: On Fill: Off Steam: Off Drain: Off	HI LIMIT CUT-OUT	• High limit humidistat is open. • Control wires are not properly secured to the terminal blocks.	• Check the operation of the high limit humidistat. • Verify the wires to the control terminal blocks #F & 1.
No water inside the evaporation chamber Or Humidifier will not stop draining	Power: On Check: On Fill: On Steam: Off Drain: Off	NO LEVEL	• Humidifier is filling with water and has not reached or is not reaching the height of the water level sensor. • Humidifier is not filling with water.	• Verify if the drain valve is manually open. • Check if the shut off valve on the water supply line is open. • Verify the operation of the fill valve. • Check the fill valve strainer and the external strainer are not blocked.

Problem	Indicator	Display	Causes	Corrective actions
Humidifier is always on Foam cycle	Power: On Check: On Fill: On Steam: Off Drain: On	FOAMING CYCLE	• Excessive foaming condition inside the evaporation chamber. • Foaming sensor is grounded.	• Verify the quality of the supply water. • Verify if chemical products were used to clean the evaporation chamber during maintenance. Rinse with water the chamber properly. • Check the setting of the Drain cycle. Reduce the time between Drain cycles.
Humidfier is operating and the CHECK light is blinking	Power: On Check:Blink Fill: Off Steam: On Drain: Off	CLEANING REQUIRED	• The Running hours have exceeded the Service hours.	• Service the evaporation chamber, see section 12. • Reset the Running hours to cancel the blinking of the CHECK light, see section 10.4 STEP 3.
Humidifier is not operating and the CHECK light is ON	Power: On Check: On Fill: Off Steam: Off Drain: Off	OVER HEATED	• The electronic temperature sensor inside the water level sensor has sensed abnormal temperature.	• Verify if the humidifier was operating below the standard water level. Replace item J if necessary.
Humidifier is not operating and the CHECK light is ON	Power: On Check: On Fill: Off Steam: Off Drain: Off	PROBE DEFECTED	• The water level sensor is damaged.	• Replace the water level sensor, item J.
Humidifier will not drain and the CHECK light is ON	Power: On Check: On Fill: Off Steam: Off Drain: Off	DRN/PROB BLOCK	• During a Drain or Foaming cycle, the water level sensor has sensed the water level has not decreased.	• Verify the drain valve, the fill and drain water pipe connection, the water level sensor chamber are not obstructed. • Reset the Alarm see section 10.4 step #6
Humidifier does not operate and the CHECK light is ON	Power: On Check: On Fill: Off Steam: Off Drain: Off	KLIXON OPEN	• The high temperature switch has sensed abnormal temperature	• Verify if the humidifier was operating below the standard water level. Replace item J if necessary. • Press the manual reset to close the klixon.
Humidifier does not operate and the CHECK light is ON	Power: On Check: On Fill: Off Steam: Off Drain: Off	PCB FUSE OPEN	The internal 24vac of the humidifier was shorted.	• Verify the internal wirings and connections. • Replace the fuse.

Problem	Indicator	Display	Causes	Corrective actions
Humidifier is not operating and the CHECK light is ON	Power: On Check: On Fill: Off Steam: Off Drain: Off	**24 VAC SHORTED**	• External 24vac provided to the humidifier is shorted.	• Check the external wirings.
Humidifier is not operating and the CHECK light is ON	Power: On Check:On Fill: Off Steam: Off Drain: Off	**24 VDC SHORTED**	• The water level sensor or the cooling fan is shorted.	• Verify the connection of these two items. Replace the water level sensor, item J or the cooling fan, item Q if necessary.
Humidifier is not operating and the CHECK light is ON	Power: On Check: On Fill: Off Steam: Off Drain: Off	**REFILL TIME OUT**	• Time elapse between two refill is too long when humidifier is producing steam.	• Verify the water level sensor and water level chamber and clean if necessary. • Reset the Alarm see section 10.4 step #6
Humidifier is not operating and the CHECK light is ON	Power: On Check: On Fill: Off Steam: Off Drain: Off	**WATR TMP DEFECTED**	• Water temperature is defective.	• Verify the connection the water level sensor. Replace the water level sensor, item J if necessary.
Humidifier is not operating and the CHECK light is ON	Power: On Check: On Fill: Off Steam: Off Drain: Off	**SSR OVER HEATED**	• The temperature on the SSR is too high.	• .Verify the cooling fan is operational or if the air vents are free of dirts. Replace the cooling fan, item Q if necessary.
Humidifier does not produce steam	Power: On Check: Off Fill: Off Steam: Off Drain: Off	**INTERLCK OPEN**	• The interlock contact is open.	• Check the interlock switch. • Verify the wires to the control terminal blocks #F & 5.

15. Notes

400 Lebeau blvd, Montreal, Qc, H4N 1R6, Canada
www.neptronic.com
Toll free in North America: 1-800-361-2308
Tel.: (514) 333-1433
Fax: (514) 333-3163
Customer service fax: (514) 333-1091
Monday to Friday: 8:00am to 5:00pm (Eastern time)